Approx. weight

Material	kg	lb
Carbon steel	18.5	40.9
Stainless steel 304 and 304L	18.7	41.1
Stainless steel 316 and 316L	18.9	41.6

Densities 7.85, 7.9 and 8.0 g/cm3.
Calculated from the dimensions as the standard gives them, with no allowance for tolerance.

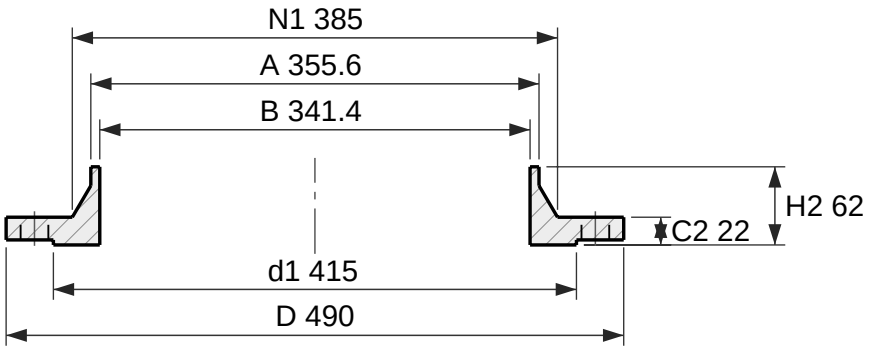

Section

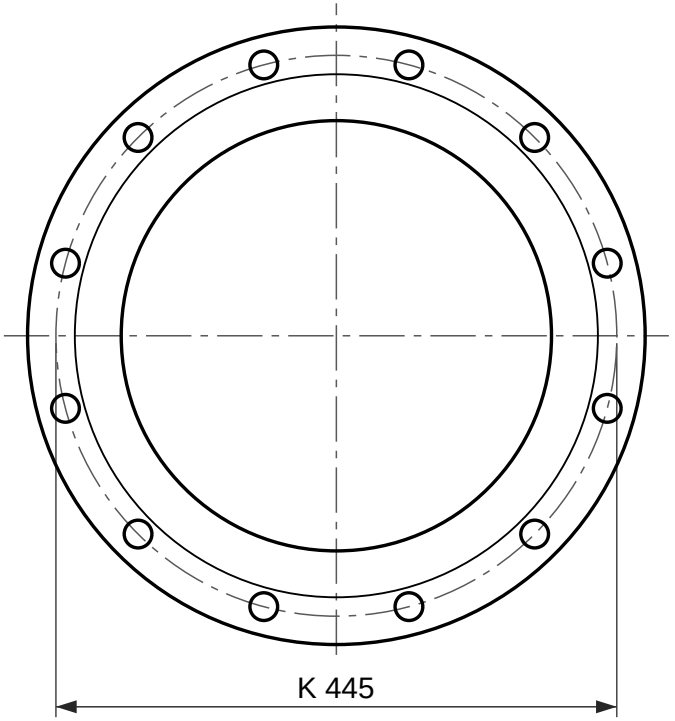

12 holes Ø22

Face view

Weld neck flange, EN 1092-1 type 11, PN 6

DN 350, facing type B1 (raised face), neck 355.6 × 7.1

Designation: Flange EN 1092-1/11/B1/DN 350/PN 6
Dimensions per EN 1092-1:2018, Table 11 (PN 6) and Table 8 (facing) and Annex A (wall thickness); tolerances per EN 1092-1.
C2 and H2 include the raised face f1, as EN 1092-1 measures it.
S is the minimum neck wall, from Annex A Table A.1; drawn at 7.1 mm. State the pipe wall in the order (for example DN 350 × 7.1).
Reference drawing. The purchase order and EN 1092-1 govern.
Generated at rajendradatacenter.com/flanges/en-1092-1/

Dimension	mm	in
D Outside diameter	490	19.29
d1 Raised face diameter	415	16.34
f1 Raised face height	4	0.16
C2 Flange thickness, raised face included	22	0.87
H2 Length through hub, raised face included	62	2.44
N1 Hub diameter at back face	385	15.16
A Neck outside diameter (pipe OD)	355.6	14.00
S Neck wall thickness (min)	7.1	0.28
B Bore, A - 2S	341.4	13.44
K Bolt circle diameter	445	17.52
L Bolt holes, 12 off	22	0.87

12 bolts M20; holes 22 mm (0.87 in)

RAJENDRA INDUSTRIAL CORPORATION
rajendradatacenter.com
Drawing RIC-EN1092-11-PN6-DN350-B1
Scale 1:6 on A4
Units: mm (inches)
Date 2026-11-22
Quote: rajendradatacenter.com/rfq/
sales@rajendradatacenter.com
+91 74338 71355