Approx. weight

Material	kg	lb
Carbon steel	5.0	11.1
Stainless steel 304 and 304L	5.1	11.2
Stainless steel 316 and 316L	5.1	11.3

Densities 7.85, 7.9 and 8.0 g/cm3.
Calculated from the dimensions as the standard gives them, with no allowance for tolerance.

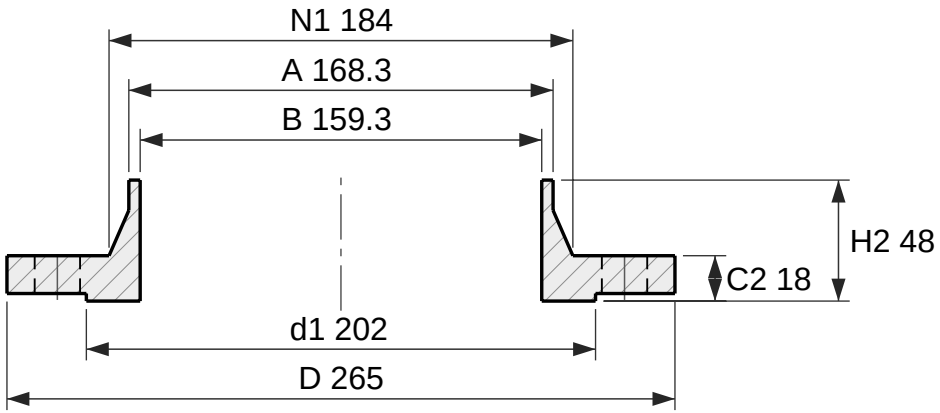

Section

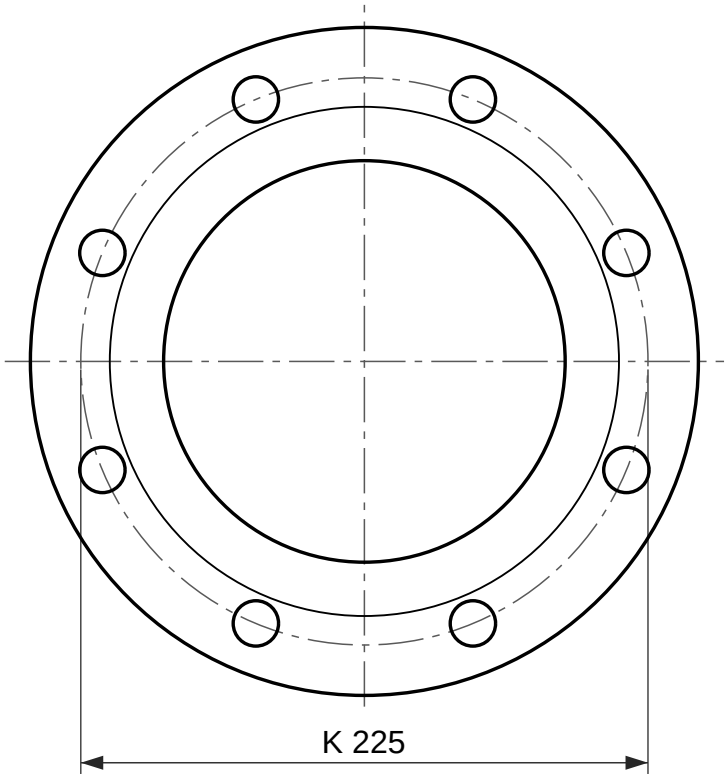

8 holes Ø18

Face view

Weld neck flange, EN 1092-1 type 11, PN 6

DN 150, facing type B1 (raised face), neck 168.3 × 4.5

Designation: Flange EN 1092-1/11/B1/DN 150/PN 6
Dimensions per EN 1092-1:2018, Table 11 (PN 6) and Table 8 (facing) and Annex A (wall thickness); tolerances per EN 1092-1.
C2 and H2 include the raised face f1, as EN 1092-1 measures it.
S is the minimum neck wall, from Annex A Table A.1; drawn at 4.5 mm. State the pipe wall in the order (for example DN 150 × 4.5).
Reference drawing. The purchase order and EN 1092-1 govern.
Generated at rajendradatacenter.com/flanges/en-1092-1/

Dimension	mm	in
D Outside diameter	265	10.43
d1 Raised face diameter	202	7.95
f1 Raised face height	3	0.12
C2 Flange thickness, raised face included	18	0.71
H2 Length through hub, raised face included	48	1.89
N1 Hub diameter at back face	184	7.24
A Neck outside diameter (pipe OD)	168.3	6.63
S Neck wall thickness (min)	4.5	0.18
B Bore, A - 2S	159.3	6.27
K Bolt circle diameter	225	8.86
L Bolt holes, 8 off	18	0.71

8 bolts M16; holes 18 mm (0.71 in)

RAJENDRA INDUSTRIAL CORPORATION
rajendradatacenter.com
Drawing RIC-EN1092-11-PN6-DN150-B1
Scale 1:3 on A4
Units: mm (inches)
Date 2026-11-22
Quote: rajendradatacenter.com/rfq/
sales@rajendradatacenter.com
+91 74338 71355