Approx. weight

Material	kg	lb
Carbon steel	0.4	0.9
Stainless steel 304 and 304L	0.4	0.9
Stainless steel 316 and 316L	0.4	0.9

Densities 7.85, 7.9 and 8.0 g/cm3.
Calculated from the dimensions as the standard gives them, with no allowance for tolerance.

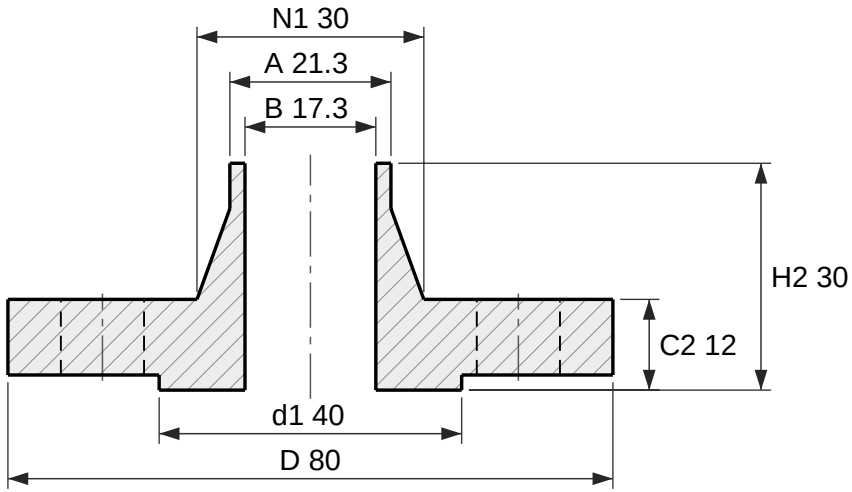

Section

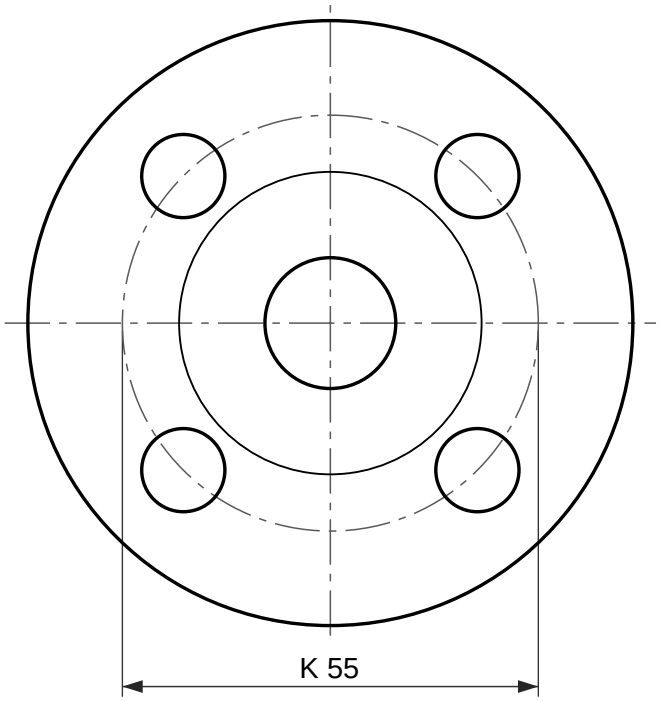

4 holes Ø11

Face view

Weld neck flange, EN 1092-1 type 11, PN 6

DN 15, facing type B1 (raised face), neck 21.3 × 2

Designation: Flange EN 1092-1/11/B1/DN 15/PN 6
Dimensions per EN 1092-1:2018, Table 11 (PN 6) and Table 8 (facing) and Annex A (wall thickness); tolerances per EN 1092-1.
C2 and H2 include the raised face f1, as EN 1092-1 measures it.
S is the minimum neck wall, from Annex A Table A.1; drawn at 2 mm. State the pipe wall in the order (for example DN 15 × 2).
Reference drawing. The purchase order and EN 1092-1 govern.
Generated at rajendradatacenter.com/flanges/en-1092-1/

Dimension	mm	in
D Outside diameter	80	3.15
d1 Raised face diameter	40	1.57
f1 Raised face height	2	0.08
C2 Flange thickness, raised face included	12	0.47
H2 Length through hub, raised face included	30	1.18
N1 Hub diameter at back face	30	1.18
A Neck outside diameter (pipe OD)	21.3	0.84
S Neck wall thickness (min)	2	0.08
B Bore, A - 2S	17.3	0.68
K Bolt circle diameter	55	2.17
L Bolt holes, 4 off	11	0.43

4 bolts M10; holes 11 mm (0.43 in)

RAJENDRA INDUSTRIAL CORPORATION
rajendradatacenter.com
Drawing RIC-EN1092-11-PN6-DN15-B1
Scale 1:1 on A4
Units: mm (inches)
Date 2026-11-22
Quote: rajendradatacenter.com/rfq/
sales@rajendradatacenter.com
+91 74338 71355