Approx. weight

Material	kg	lb
Carbon steel	0.3	0.8
Stainless steel 304 and 304L	0.3	0.8
Stainless steel 316 and 316L	0.3	0.8

Densities 7.85, 7.9 and 8.0 g/cm3.
Calculated from the dimensions as the standard gives them, with no allowance for tolerance.

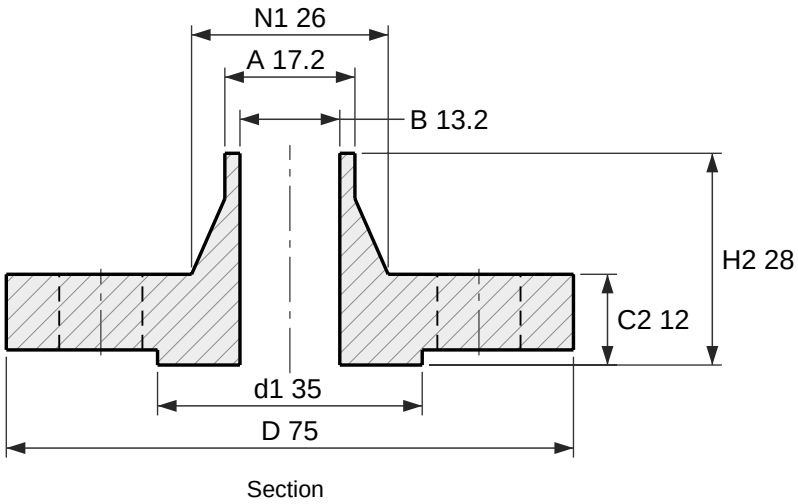

Section

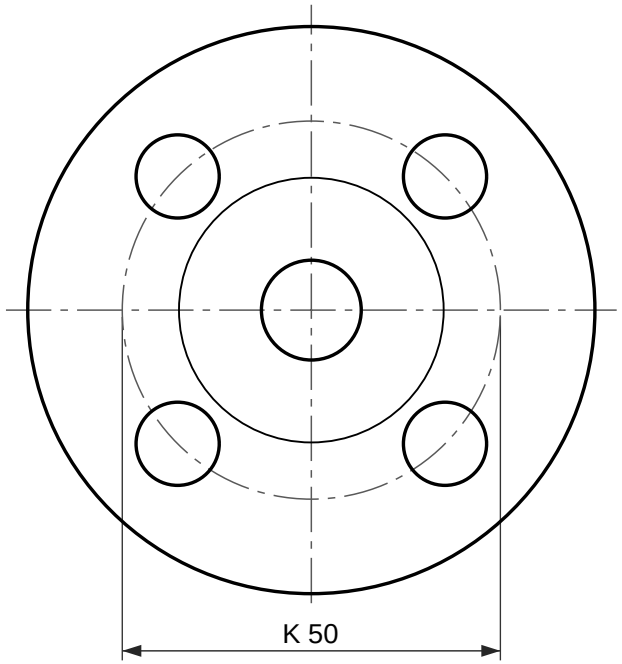

4 holes Ø11
Face view

Weld neck flange, EN 1092-1 type 11, PN 6

DN 10, facing type B1 (raised face), neck 17.2 × 2

Designation: Flange EN 1092-1/11/B1/DN 10/PN 6
Dimensions per EN 1092-1:2018, Table 11 (PN 6) and Table 8 (facing) and Annex A (wall thickness); tolerances per EN 1092-1.
C2 and H2 include the raised face f1, as EN 1092-1 measures it.
S is the minimum neck wall, from Annex A Table A.1; drawn at 2 mm. State the pipe wall in the order (for example DN 10 × 2).
Reference drawing. The purchase order and EN 1092-1 govern.
Generated at rajendradatacenter.com/flanges/en-1092-1/

Dimension	mm	in
D Outside diameter	75	2.95
d1 Raised face diameter	35	1.38
f1 Raised face height	2	0.08
C2 Flange thickness, raised face included	12	0.47
H2 Length through hub, raised face included	28	1.10
N1 Hub diameter at back face	26	1.02
A Neck outside diameter (pipe OD)	17.2	0.68
S Neck wall thickness (min)	2	0.08
B Bore, A - 2S	13.2	0.52
K Bolt circle diameter	50	1.97
L Bolt holes, 4 off	11	0.43

4 bolts M10; holes 11 mm (0.43 in)

RAJENDRA INDUSTRIAL CORPORATION
rajendradatacenter.com
Drawing RIC-EN1092-11-PN6-DN10-B1
Scale 1:1 on A4
Units: mm (inches)
Date 2026-11-22
Quote: rajendradatacenter.com/rfq/
sales@rajendradatacenter.com
+91 74338 71355