Approx. weight

Material	kg	lb
Carbon steel	67.7	149
Stainless steel 304 and 304L	68.2	150
Stainless steel 316 and 316L	69.0	152

Densities 7.85, 7.9 and 8.0 g/cm3.
Calculated from the dimensions as the standard gives them, with no allowance for tolerance.

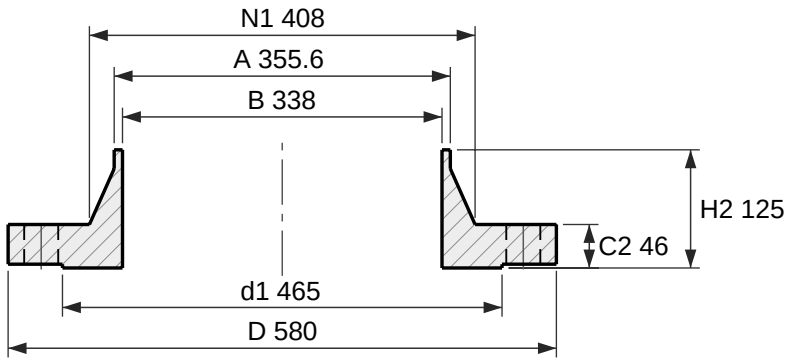

Section

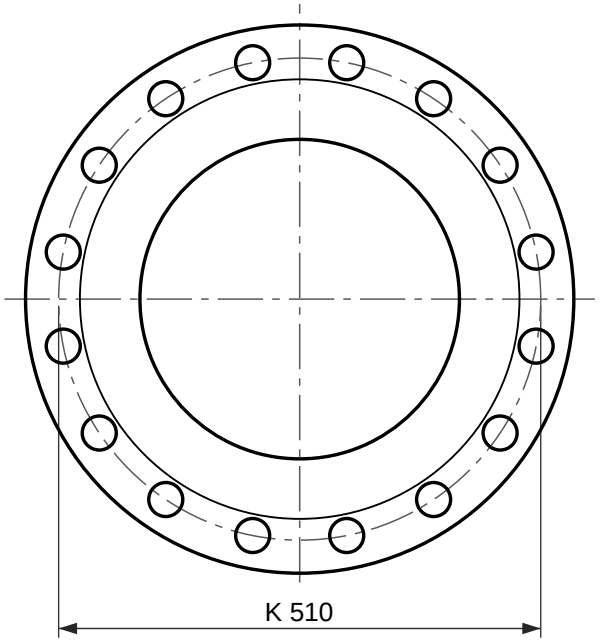

16 holes Ø36
Face view

Weld neck flange, EN 1092-1 type 11, PN 40

DN 350, facing type B1 (raised face), neck 355.6 × 8.8

Designation: Flange EN 1092-1/11/B1/DN 350/PN 40
Dimensions per EN 1092-1:2018, Table 15 (PN 40) and Table 8 (facing) and Annex A (wall thickness); tolerances per EN 1092-1.
C2 and H2 include the raised face f1, as EN 1092-1 measures it.
S is the minimum neck wall, from Annex A Table A.1; drawn at 8.8 mm. State the pipe wall in the order (for example DN 350 × 8.8).
Reference drawing. The purchase order and EN 1092-1 govern.
Generated at rajendradatacenter.com/flanges/en-1092-1/

Dimension	mm	in
D Outside diameter	580	22.83
d1 Raised face diameter	465	18.31
f1 Raised face height	4	0.16
C2 Flange thickness, raised face included	46	1.81
H2 Length through hub, raised face included	125	4.92
N1 Hub diameter at back face	408	16.06
A Neck outside diameter (pipe OD)	355.6	14.00
S Neck wall thickness (min)	8.8	0.35
B Bore, A - 2S	338	13.31
K Bolt circle diameter	510	20.08
L Bolt holes, 16 off	36	1.42

16 bolts M33; holes 36 mm (1.42 in)

RAJENDRA INDUSTRIAL CORPORATION
rajendradatacenter.com
Drawing RIC-EN1092-11-PN40-DN350-B1
Scale 1:8 on A4
Units: mm (inches)
Date 2026-11-22
Quote: rajendradatacenter.com/rfq/
sales@rajendradatacenter.com
+91 74338 71355