Approx. weight

Material	kg	lb
Carbon steel	33.3	73.5
Stainless steel 304 and 304L	33.5	74.0
Stainless steel 316 and 316L	34.0	74.9

Densities 7.85, 7.9 and 8.0 g/cm3.
Calculated from the dimensions as the standard gives them, with no allowance for tolerance.

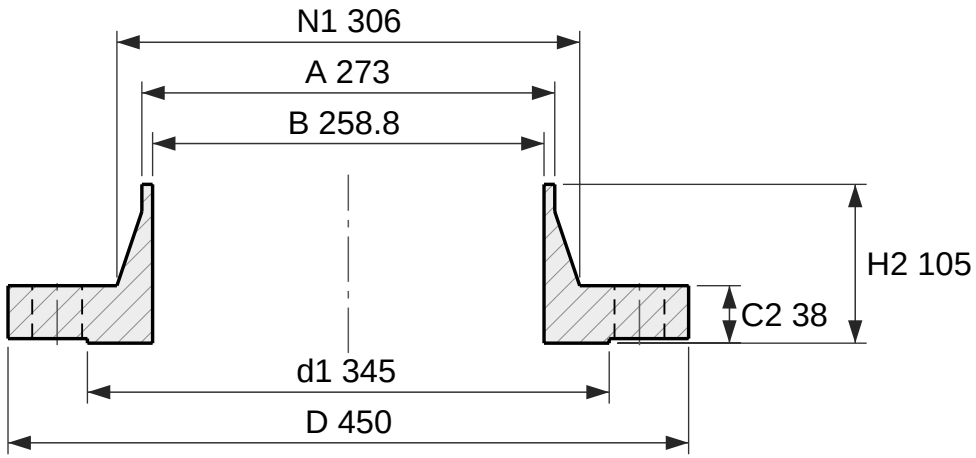

Section

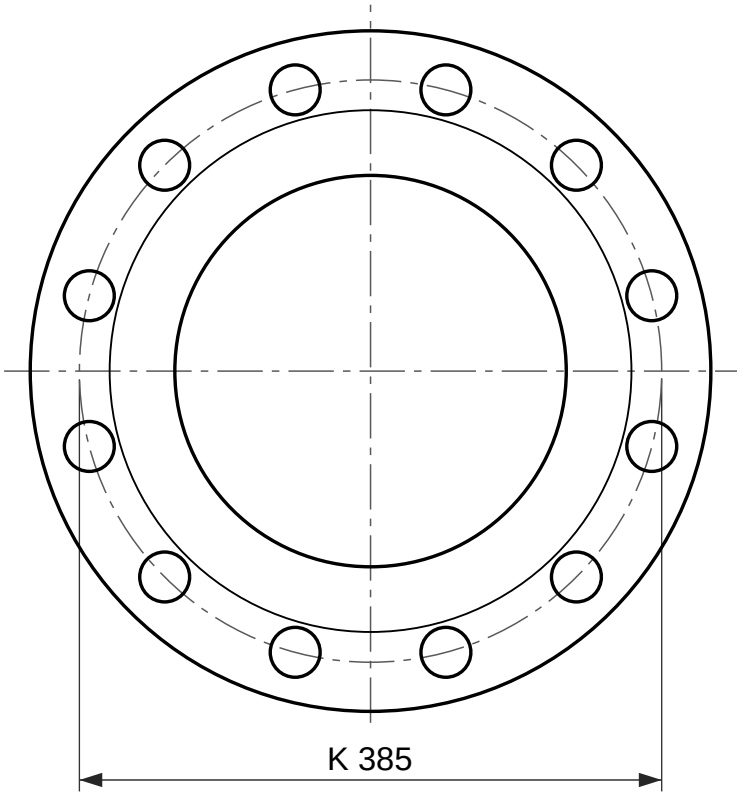

12 holes Ø33

Face view

Weld neck flange, EN 1092-1 type 11, PN 40

DN 250, facing type B1 (raised face), neck 273 × 7.1

Designation: Flange EN 1092-1/11/B1/DN 250/PN 40
Dimensions per EN 1092-1:2018, Table 15 (PN 40) and Table 8 (facing) and Annex A (wall thickness); tolerances per EN 1092-1.
C2 and H2 include the raised face f1, as EN 1092-1 measures it.
S is the minimum neck wall, from Annex A Table A.1; drawn at 7.1 mm. State the pipe wall in the order (for example DN 250 × 7.1).
Reference drawing. The purchase order and EN 1092-1 govern.
Generated at rajendradatacenter.com/flanges/en-1092-1/

Dimension	mm	in
D Outside diameter	450	17.72
d1 Raised face diameter	345	13.58
f1 Raised face height	3	0.12
C2 Flange thickness, raised face included	38	1.50
H2 Length through hub, raised face included	105	4.13
N1 Hub diameter at back face	306	12.05
A Neck outside diameter (pipe OD)	273	10.75
S Neck wall thickness (min)	7.1	0.28
B Bore, A - 2S	258.8	10.19
K Bolt circle diameter	385	15.16
L Bolt holes, 12 off	33	1.30

12 bolts M30; holes 33 mm (1.30 in)

RAJENDRA INDUSTRIAL CORPORATION
rajendradatacenter.com
Drawing RIC-EN1092-11-PN40-DN250-B1
Scale 1:5 on A4
Units: mm (inches)
Date 2026-11-22
Quote: rajendradatacenter.com/rfq/
sales@rajendradatacenter.com
+91 74338 71355