Approx. weight

Material	kg	lb
Carbon steel	20.5	45.2
Stainless steel 304 and 304L	20.6	45.5
Stainless steel 316 and 316L	20.9	46.0

Densities 7.85, 7.9 and 8.0 g/cm3.
Calculated from the dimensions as the standard gives them, with no allowance for tolerance.

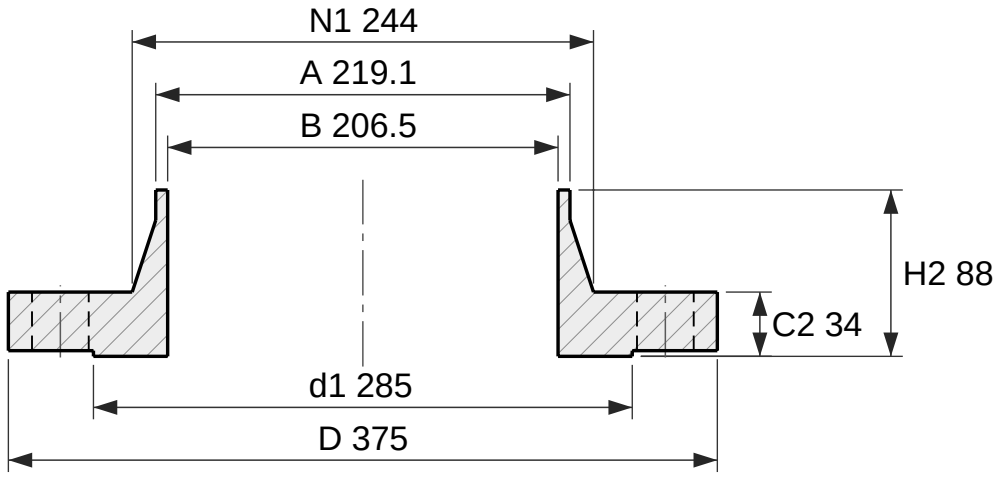

Section

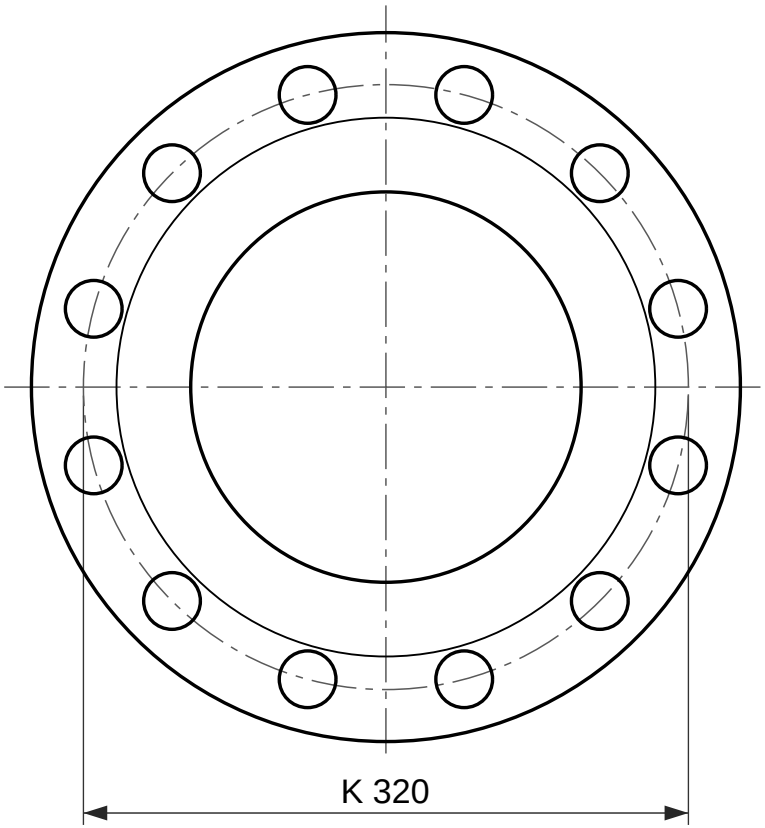

12 holes Ø30

Face view

Weld neck flange, EN 1092-1 type 11, PN 40

DN 200, facing type B1 (raised face), neck 219.1 × 6.3

Designation: Flange EN 1092-1/11/B1/DN 200/PN 40
Dimensions per EN 1092-1:2018, Table 15 (PN 40) and Table 8 (facing) and Annex A (wall thickness); tolerances per EN 1092-1.
C2 and H2 include the raised face f1, as EN 1092-1 measures it.
S is the minimum neck wall, from Annex A Table A.1; drawn at 6.3 mm. State the pipe wall in the order (for example DN 200 × 6.3).
Reference drawing. The purchase order and EN 1092-1 govern.
Generated at rajendradatacenter.com/flanges/en-1092-1/

Dimension	mm	in
D Outside diameter	375	14.76
d1 Raised face diameter	285	11.22
f1 Raised face height	3	0.12
C2 Flange thickness, raised face included	34	1.34
H2 Length through hub, raised face included	88	3.46
N1 Hub diameter at back face	244	9.61
A Neck outside diameter (pipe OD)	219.1	8.63
S Neck wall thickness (min)	6.3	0.25
B Bore, A - 2S	206.5	8.13
K Bolt circle diameter	320	12.60
L Bolt holes, 12 off	30	1.18

12 bolts M27; holes 30 mm (1.18 in)

RAJENDRA INDUSTRIAL CORPORATION
rajendradatacenter.com
Drawing RIC-EN1092-11-PN40-DN200-B1
Scale 1:4 on A4
Units: mm (inches)
Date 2026-11-22
Quote: rajendradatacenter.com/rfq/
sales@rajendradatacenter.com
+91 74338 71355