Approx. weight

Material	kg	lb
Carbon steel	121	267
Stainless steel 304 and 304L	122	269
Stainless steel 316 and 316L	123	272

Densities 7.85, 7.9 and 8.0 g/cm3.
Calculated from the dimensions as the standard gives them, with no allowance for tolerance.

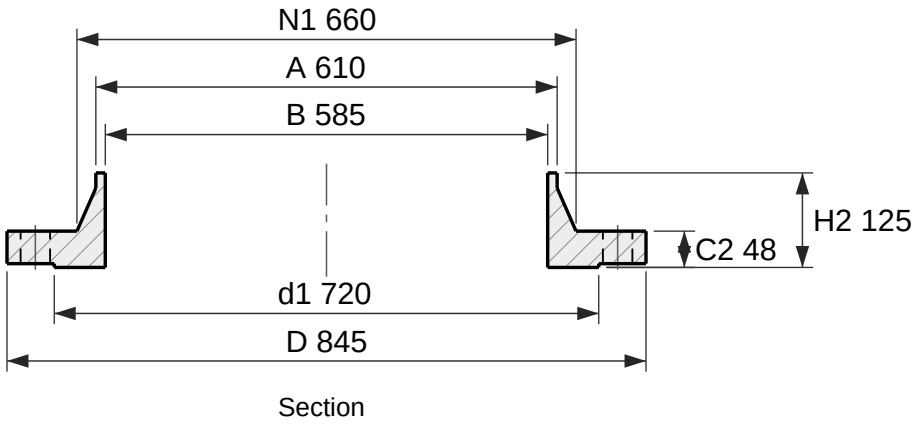

Section

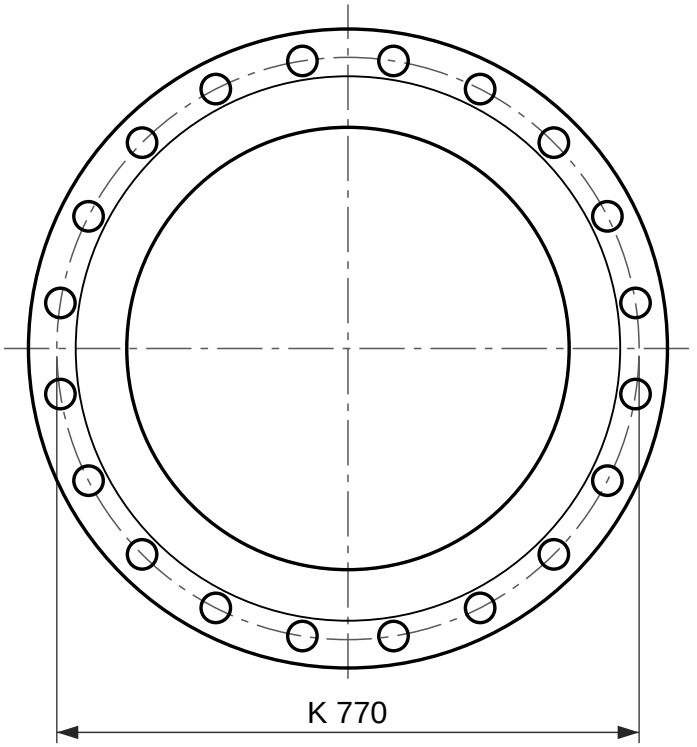

20 holes Ø39

Face view

Weld neck flange, EN 1092-1 type 11, PN 25

DN 600, facing type B1 (raised face), neck 610 × 12.5

Designation: Flange EN 1092-1/11/B1/DN 600/PN 25
Dimensions per EN 1092-1:2018, Table 14 (PN 25) and Table 8 (facing) and Annex A (wall thickness); tolerances per EN 1092-1.
C2 and H2 include the raised face f1, as EN 1092-1 measures it.
S is the minimum neck wall, from Annex A Table A.1; drawn at 12.5 mm. State the pipe wall in the order (for example DN 600 × 12.5).
Reference drawing. The purchase order and EN 1092-1 govern.
Generated at rajendradatacenter.com/flanges/en-1092-1/

Dimension	mm	in
D Outside diameter	845	33.27
d1 Raised face diameter	720	28.35
f1 Raised face height	5	0.20
C2 Flange thickness, raised face included	48	1.89
H2 Length through hub, raised face included	125	4.92
N1 Hub diameter at back face	660	25.98
A Neck outside diameter (pipe OD)	610	24.02
S Neck wall thickness (min)	12.5	0.49
B Bore, A - 2S	585	23.03
K Bolt circle diameter	770	30.31
L Bolt holes, 20 off	39	1.54

20 bolts M36; holes 39 mm (1.54 in)

RAJENDRA INDUSTRIAL CORPORATION
rajendradatacenter.com
Drawing RIC-EN1092-11-PN25-DN600-B1
Scale 1:10 on A4
Units: mm (inches)
Date 2026-11-22
Quote: rajendradatacenter.com/rfq/
sales@rajendradatacenter.com
+91 74338 71355