Approx. weight

Material	kg	lb
Carbon steel	30.7	67.8
Stainless steel 304 and 304L	30.9	68.2
Stainless steel 316 and 316L	31.3	69.1

Densities 7.85, 7.9 and 8.0 g/cm3.
Calculated from the dimensions as the standard gives them, with no allowance for tolerance.

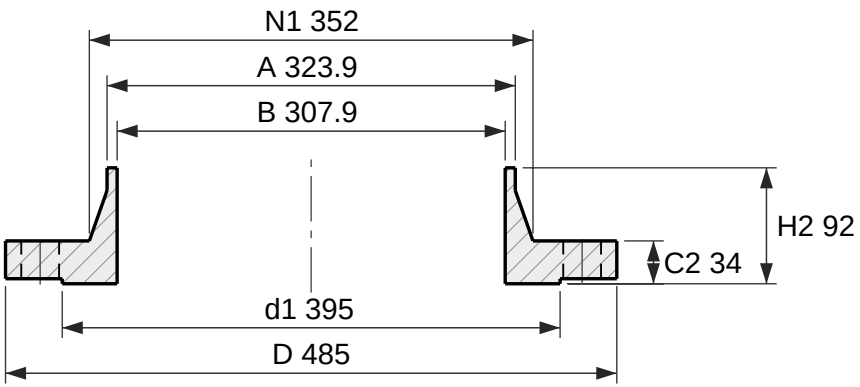

Section

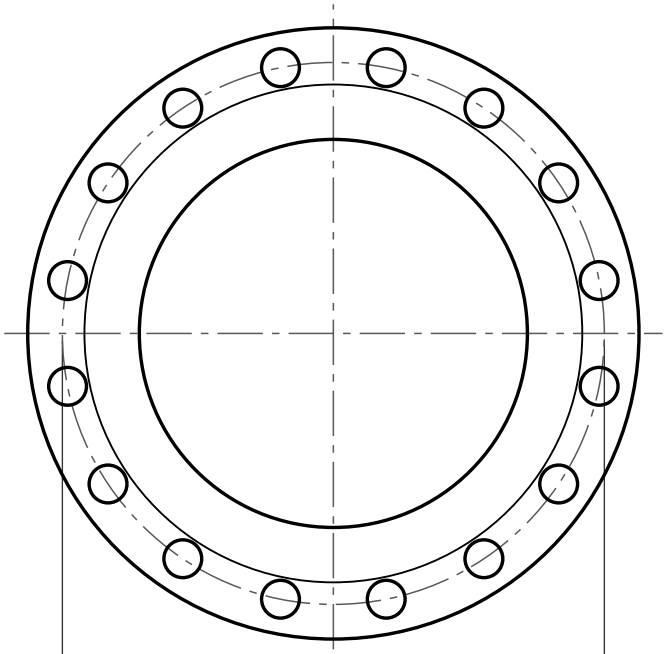

16 holes Ø30
Face view

Weld neck flange, EN 1092-1 type 11, PN 25

DN 300, facing type B1 (raised face), neck 323.9 × 8

Designation: Flange EN 1092-1/11/B1/DN 300/PN 25
Dimensions per EN 1092-1:2018, Table 14 (PN 25) and Table 8 (facing) and Annex A (wall thickness); tolerances per EN 1092-1.
C2 and H2 include the raised face f1, as EN 1092-1 measures it.
S is the minimum neck wall, from Annex A Table A.1; drawn at 8 mm. State the pipe wall in the order (for example DN 300 × 8).
Reference drawing. The purchase order and EN 1092-1 govern.
Generated at rajendradatacenter.com/flanges/en-1092-1/

Dimension	mm	in
D Outside diameter	485	19.09
d1 Raised face diameter	395	15.55
f1 Raised face height	4	0.16
C2 Flange thickness, raised face included	34	1.34
H2 Length through hub, raised face included	92	3.62
N1 Hub diameter at back face	352	13.86
A Neck outside diameter (pipe OD)	323.9	12.75
S Neck wall thickness (min)	8	0.31
B Bore, A - 2S	307.9	12.12
K Bolt circle diameter	430	16.93
L Bolt holes, 16 off	30	1.18

16 bolts M27; holes 30 mm (1.18 in)

RAJENDRA INDUSTRIAL CORPORATION
rajendradatacenter.com
Drawing RIC-EN1092-11-PN25-DN300-B1
Scale 1:6 on A4
Units: mm (inches)
Date 2026-11-22
Quote: rajendradatacenter.com/rfq/
sales@rajendradatacenter.com
+91 74338 71355