Approx. weight

Material	kg	lb
Carbon steel	1.1	2.4
Stainless steel 304 and 304L	1.1	2.4
Stainless steel 316 and 316L	1.1	2.4

Densities 7.85, 7.9 and 8.0 g/cm3.
Calculated from the dimensions as the standard gives them, with no allowance for tolerance.

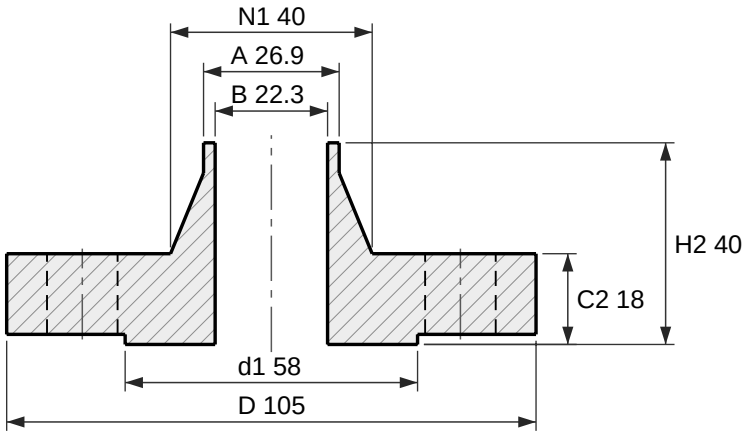

Section

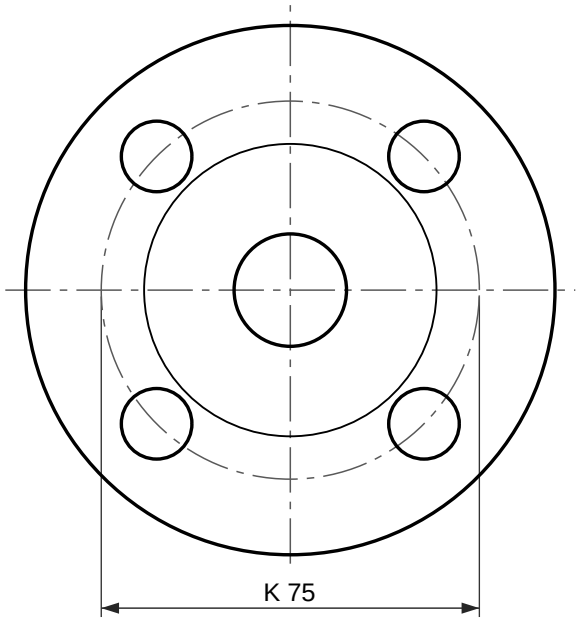

4 holes Ø14
Face view

Weld neck flange, EN 1092-1 type 11, PN 25

DN 20, facing type B1 (raised face), neck 26.9 × 2.3

Designation: Flange EN 1092-1/11/B1/DN 20/PN 25
Dimensions per EN 1092-1:2018, Table 14 (PN 25) and Table 8 (facing) and Annex A (wall thickness); tolerances per EN 1092-1.
C2 and H2 include the raised face f1, as EN 1092-1 measures it.
S is the minimum neck wall, from Annex A Table A.1; drawn at 2.3 mm. State the pipe wall in the order (for example DN 20 × 2.3).
EN 1092-1 gives PN 25 the same dimensions as PN 10, PN 16, PN 40 in DN 20; only the marking differs.
Reference drawing. The purchase order and EN 1092-1 govern.
Generated at rajendradatacenter.com/flanges/en-1092-1/

Dimension	mm	in
D Outside diameter	105	4.13
d1 Raised face diameter	58	2.28
f1 Raised face height	2	0.08
C2 Flange thickness, raised face included	18	0.71
H2 Length through hub, raised face included	40	1.57
N1 Hub diameter at back face	40	1.57
A Neck outside diameter (pipe OD)	26.9	1.06
S Neck wall thickness (min)	2.3	0.09
B Bore, A - 2S	22.3	0.88
K Bolt circle diameter	75	2.95
L Bolt holes, 4 off	14	0.55

4 bolts M12; holes 14 mm (0.55 in)

RAJENDRA INDUSTRIAL CORPORATION
rajendradatacenter.com
Drawing RIC-EN1092-11-PN25-DN20-B1
Scale 1:1.5 on A4
Units: mm (inches)
Date 2026-11-22
Quote: rajendradatacenter.com/rfq/
sales@rajendradatacenter.com
+91 74338 71355