Approx. weight

Material	kg	lb
Carbon steel	11.3	24.9
Stainless steel 304 and 304L	11.4	25.1
Stainless steel 316 and 316L	11.5	25.4

Densities 7.85, 7.9 and 8.0 g/cm3.
Calculated from the dimensions as the standard gives them, with no allowance for tolerance.

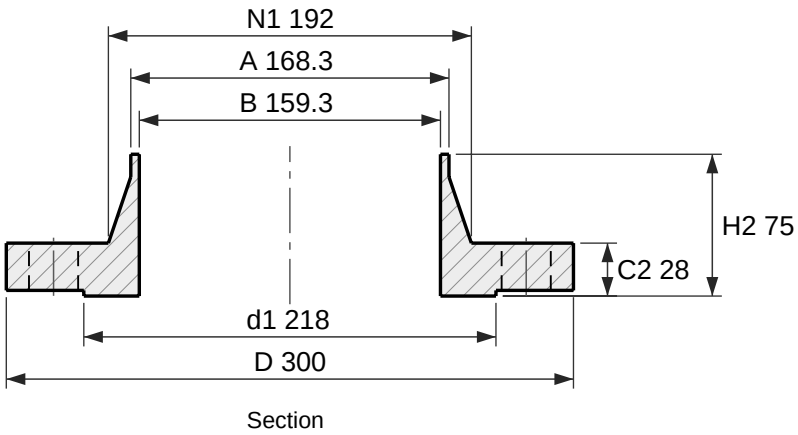

Section

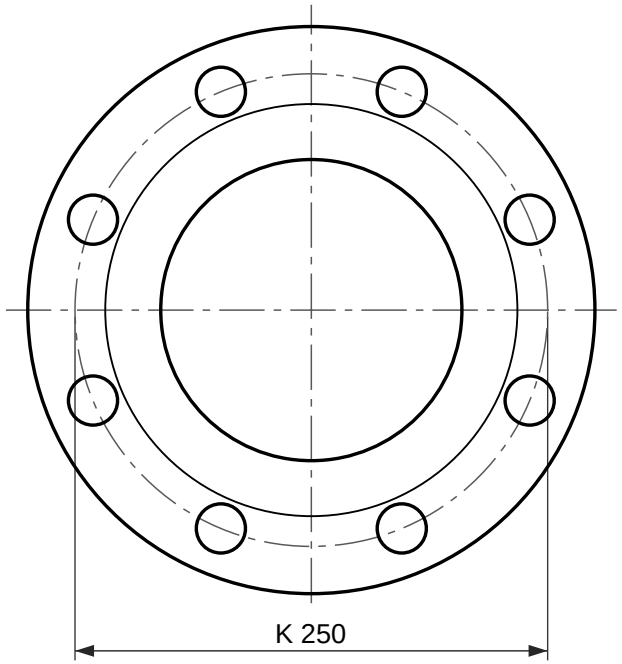

8 holes Ø26
Face view

Weld neck flange, EN 1092-1 type 11, PN 25

DN 150, facing type B1 (raised face), neck 168.3 × 4.5

Designation: Flange EN 1092-1/11/B1/DN 150/PN 25
Dimensions per EN 1092-1:2018, Table 14 (PN 25) and Table 8 (facing) and Annex A (wall thickness); tolerances per EN 1092-1.
C2 and H2 include the raised face f1, as EN 1092-1 measures it.
S is the minimum neck wall, from Annex A Table A.1; drawn at 4.5 mm. State the pipe wall in the order (for example DN 150 × 4.5).
EN 1092-1 gives PN 25 the same dimensions as PN 40 in DN 150; only the marking differs.
Reference drawing. The purchase order and EN 1092-1 govern.
Generated at rajendradatacenter.com/flanges/en-1092-1/

Dimension	mm	in
D Outside diameter	300	11.81
d1 Raised face diameter	218	8.58
f1 Raised face height	3	0.12
C2 Flange thickness, raised face included	28	1.10
H2 Length through hub, raised face included	75	2.95
N1 Hub diameter at back face	192	7.56
A Neck outside diameter (pipe OD)	168.3	6.63
S Neck wall thickness (min)	4.5	0.18
B Bore, A - 2S	159.3	6.27
K Bolt circle diameter	250	9.84
L Bolt holes, 8 off	26	1.02

8 bolts M24; holes 26 mm (1.02 in)

RAJENDRA INDUSTRIAL CORPORATION
rajendradatacenter.com
Drawing RIC-EN1092-11-PN25-DN150-B1
Scale 1:4 on A4
Units: mm (inches)
Date 2026-11-22
Quote: rajendradatacenter.com/rfq/
sales@rajendradatacenter.com
+91 74338 71355