Approx. weight

Material	kg	lb
Carbon steel	8.6	19.0
Stainless steel 304 and 304L	8.7	19.1
Stainless steel 316 and 316L	8.8	19.4

Densities 7.85, 7.9 and 8.0 g/cm3.
Calculated from the dimensions as the standard gives them, with no allowance for tolerance.

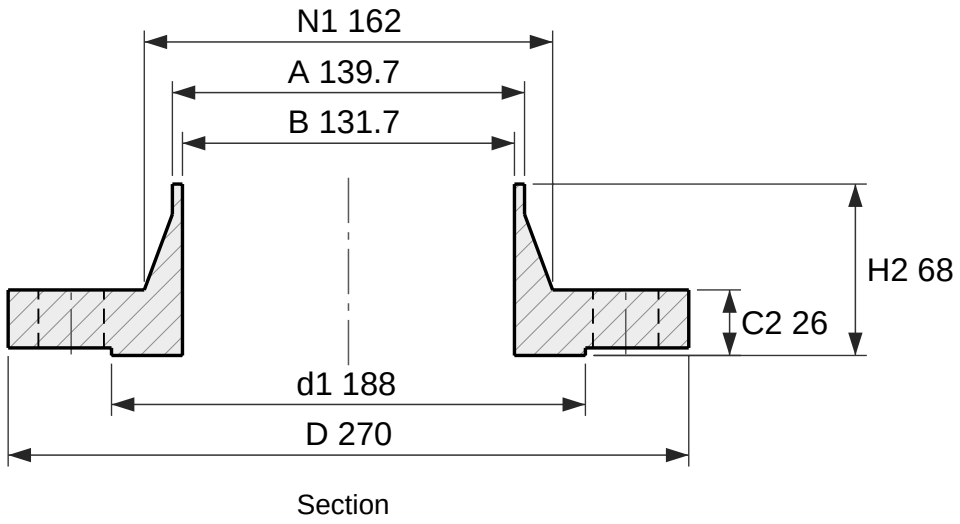

Section

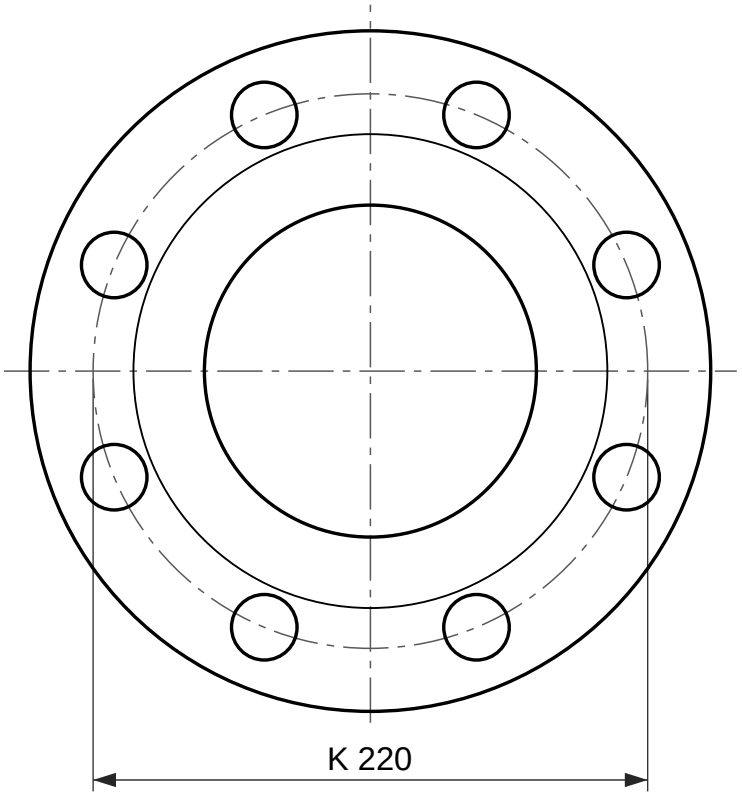

8 holes Ø26

Face view

Weld neck flange, EN 1092-1 type 11, PN 25

DN 125, facing type B1 (raised face), neck 139.7 × 4

Designation: Flange EN 1092-1/11/B1/DN 125/PN 25
Dimensions per EN 1092-1:2018, Table 14 (PN 25) and Table 8 (facing) and Annex A (wall thickness); tolerances per EN 1092-1.
C2 and H2 include the raised face f1, as EN 1092-1 measures it.
S is the minimum neck wall, from Annex A Table A.1; drawn at 4 mm. State the pipe wall in the order (for example DN 125 × 4).
EN 1092-1 gives PN 25 the same dimensions as PN 40 in DN 125; only the marking differs.
Reference drawing. The purchase order and EN 1092-1 govern.
Generated at rajendradatacenter.com/flanges/en-1092-1/

Dimension	mm	in
D Outside diameter	270	10.63
d1 Raised face diameter	188	7.40
f1 Raised face height	3	0.12
C2 Flange thickness, raised face included	26	1.02
H2 Length through hub, raised face included	68	2.68
N1 Hub diameter at back face	162	6.38
A Neck outside diameter (pipe OD)	139.7	5.50
S Neck wall thickness (min)	4	0.16
B Bore, A - 2S	131.7	5.19
K Bolt circle diameter	220	8.66
L Bolt holes, 8 off	26	1.02

8 bolts M24; holes 26 mm (1.02 in)

RAJENDRA INDUSTRIAL CORPORATION
rajendradatacenter.com
Drawing RIC-EN1092-11-PN25-DN125-B1
Scale 1:3 on A4
Units: mm (inches)
Date 2026-11-22
Quote: rajendradatacenter.com/rfq/
sales@rajendradatacenter.com
+91 74338 71355