Approx. weight

Material	kg	lb
Carbon steel	6.3	13.8
Stainless steel 304 and 304L	6.3	13.9
Stainless steel 316 and 316L	6.4	14.1

Densities 7.85, 7.9 and 8.0 g/cm3.
Calculated from the dimensions as the standard gives them, with no allowance for tolerance.

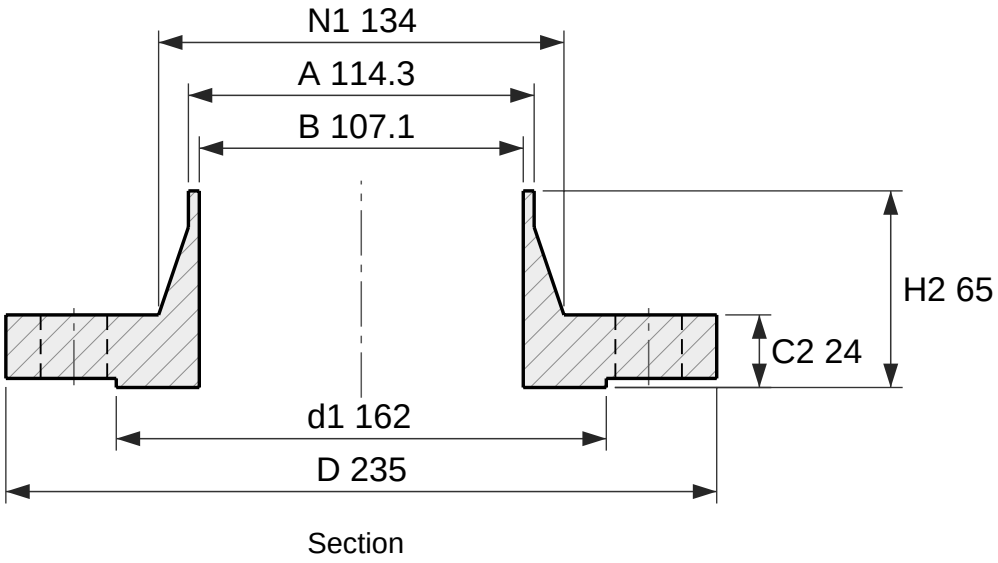

Section

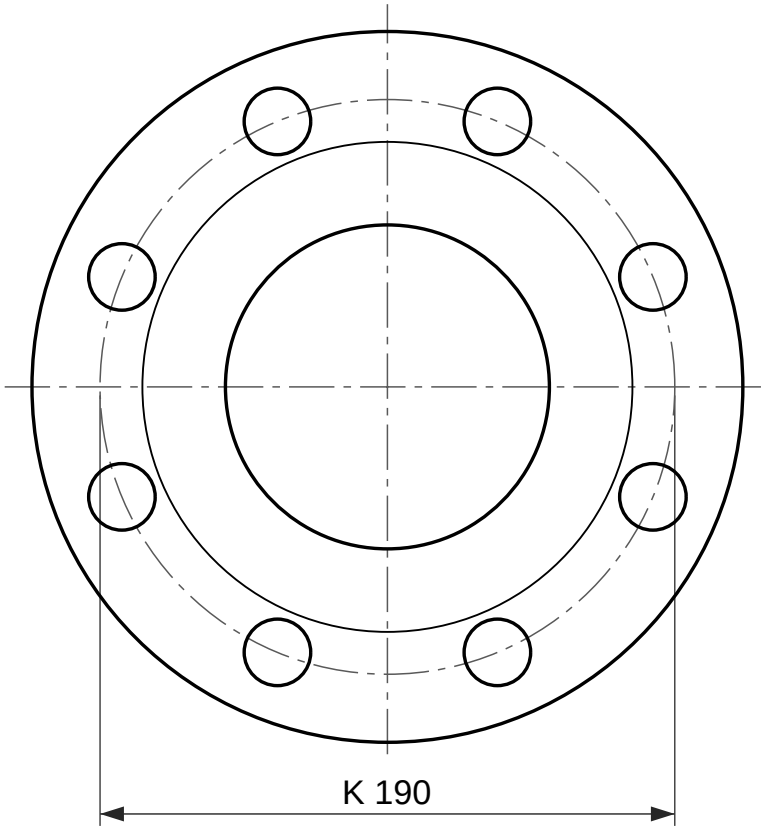

8 holes Ø22

Face view

Weld neck flange, EN 1092-1 type 11, PN 25

DN 100, facing type B1 (raised face), neck 114.3 × 3.6

Designation: Flange EN 1092-1/11/B1/DN 100/PN 25
Dimensions per EN 1092-1:2018, Table 14 (PN 25) and Table 8 (facing) and Annex A (wall thickness); tolerances per EN 1092-1.
C2 and H2 include the raised face f1, as EN 1092-1 measures it.
S is the minimum neck wall, from Annex A Table A.1; drawn at 3.6 mm. State the pipe wall in the order (for example DN 100 × 3.6).
EN 1092-1 gives PN 25 the same dimensions as PN 40 in DN 100; only the marking differs.
Reference drawing. The purchase order and EN 1092-1 govern.
Generated at rajendradatacenter.com/flanges/en-1092-1/

Dimension	mm	in
D Outside diameter	235	9.25
d1 Raised face diameter	162	6.38
f1 Raised face height	3	0.12
C2 Flange thickness, raised face included	24	0.94
H2 Length through hub, raised face included	65	2.56
N1 Hub diameter at back face	134	5.28
A Neck outside diameter (pipe OD)	114.3	4.50
S Neck wall thickness (min)	3.6	0.14
B Bore, A - 2S	107.1	4.22
K Bolt circle diameter	190	7.48
L Bolt holes, 8 off	22	0.87

8 bolts M20; holes 22 mm (0.87 in)

RAJENDRA INDUSTRIAL CORPORATION
rajendradatacenter.com
Drawing RIC-EN1092-11-PN25-DN100-B1
Scale 1:2.5 on A4
Units: mm (inches)
Date 2026-11-22
Quote: rajendradatacenter.com/rfq/
sales@rajendradatacenter.com
+91 74338 71355