Approx. weight

Material	kg	lb
Carbon steel	61.7	136
Stainless steel 304 and 304L	62.1	137
Stainless steel 316 and 316L	62.9	139

Densities 7.85, 7.9 and 8.0 g/cm3.
Calculated from the dimensions as the standard gives them, with no allowance for tolerance.

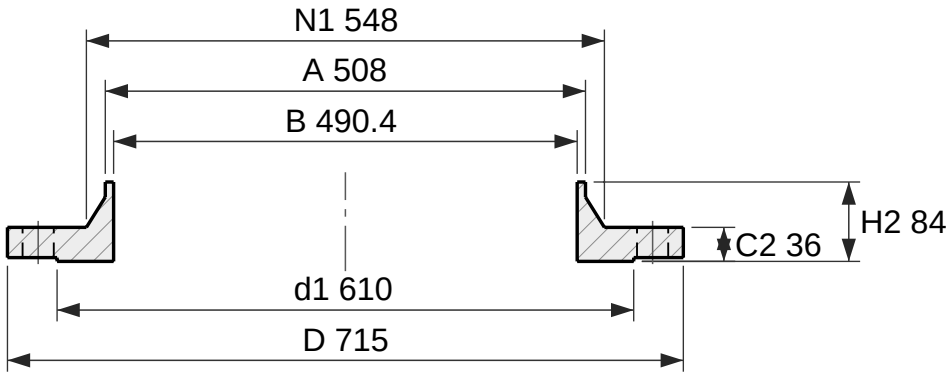

Section

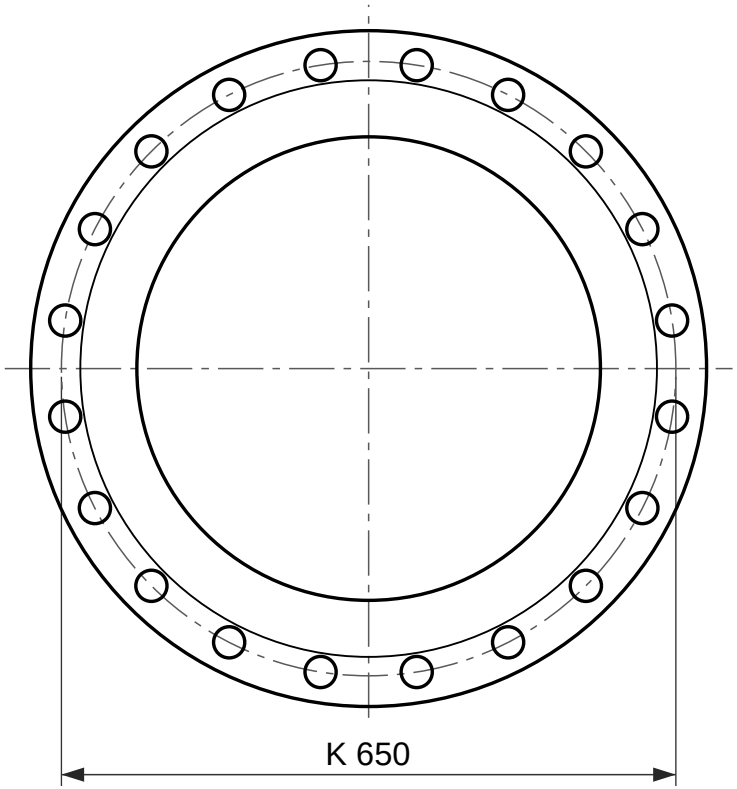

20 holes Ø33

Face view

Weld neck flange, EN 1092-1 type 11, PN 16

DN 500, facing type B1 (raised face), neck 508 × 8.8

Designation: Flange EN 1092-1/11/B1/DN 500/PN 16
Dimensions per EN 1092-1:2018, Table 13 (PN 16) and Table 8 (facing) and Annex A (wall thickness); tolerances per EN 1092-1.
C2 and H2 include the raised face f1, as EN 1092-1 measures it.
S is the minimum neck wall, from Annex A Table A.1; drawn at 8.8 mm. State the pipe wall in the order (for example DN 500 × 8.8).
Reference drawing. The purchase order and EN 1092-1 govern.
Generated at rajendradatacenter.com/flanges/en-1092-1/

Dimension	mm	in
D Outside diameter	715	28.15
d1 Raised face diameter	610	24.02
f1 Raised face height	4	0.16
C2 Flange thickness, raised face included	36	1.42
H2 Length through hub, raised face included	84	3.31
N1 Hub diameter at back face	548	21.57
A Neck outside diameter (pipe OD)	508	20.00
S Neck wall thickness (min)	8.8	0.35
B Bore, A - 2S	490.4	19.31
K Bolt circle diameter	650	25.59
L Bolt holes, 20 off	33	1.30

20 bolts M30; holes 33 mm (1.30 in)

RAJENDRA INDUSTRIAL CORPORATION
rajendradatacenter.com
Drawing RIC-EN1092-11-PN16-DN500-B1
Scale 1:8 on A4
Units: mm (inches)
Date 2026-11-22
Quote: rajendradatacenter.com/rfq/
sales@rajendradatacenter.com
+91 74338 71355