Approx. weight

Material	kg	lb
Carbon steel	7.4	16.3
Stainless steel 304 and 304L	7.5	16.4
Stainless steel 316 and 316L	7.5	16.6

Densities 7.85, 7.9 and 8.0 g/cm3.
Calculated from the dimensions as the standard gives them, with no allowance for tolerance.

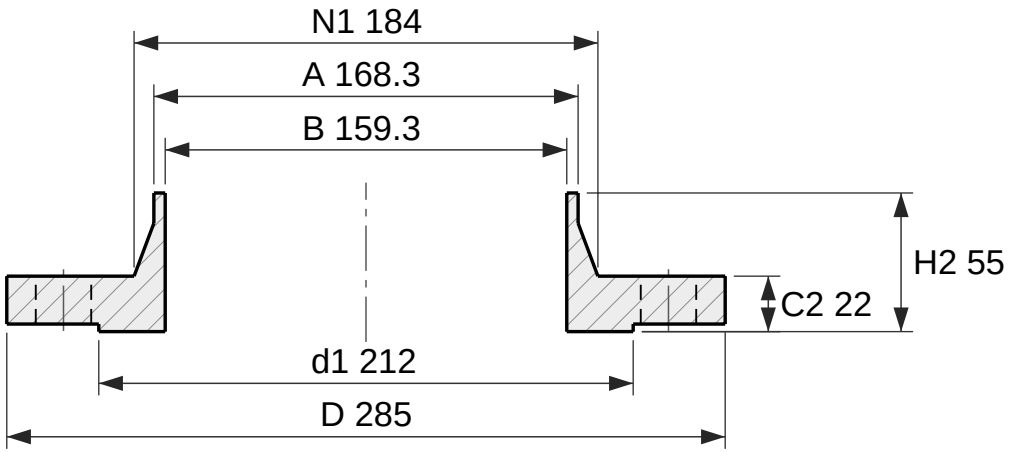

Section

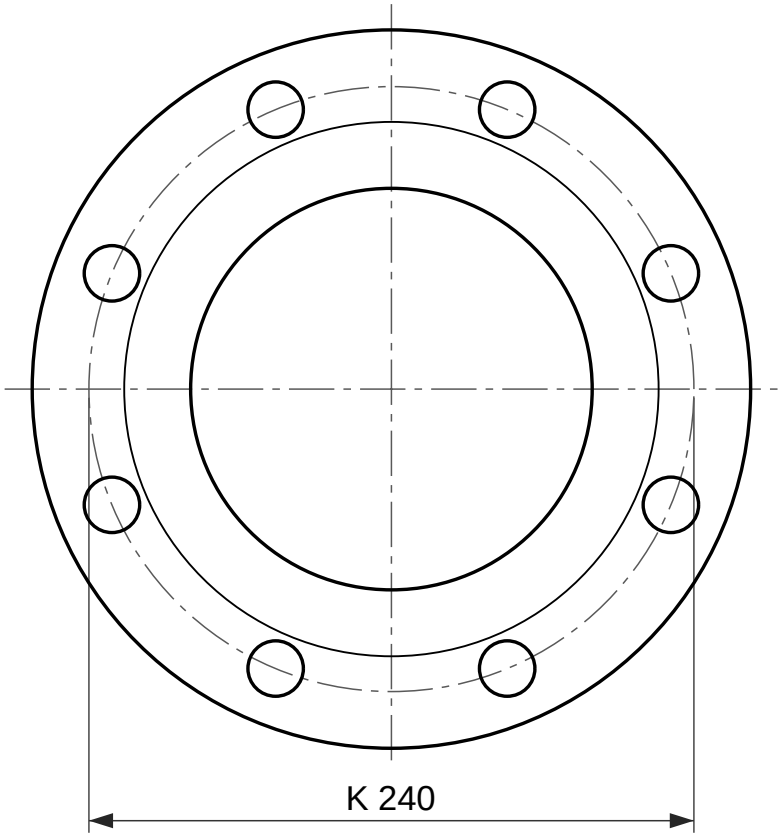

8 holes Ø22

Face view

Weld neck flange, EN 1092-1 type 11, PN 16

DN 150, facing type B1 (raised face), neck 168.3 × 4.5

Designation: Flange EN 1092-1/11/B1/DN 150/PN 16
Dimensions per EN 1092-1:2018, Table 13 (PN 16) and Table 8 (facing) and Annex A (wall thickness); tolerances per EN 1092-1.
C2 and H2 include the raised face f1, as EN 1092-1 measures it.
S is the minimum neck wall, from Annex A Table A.1; drawn at 4.5 mm. State the pipe wall in the order (for example DN 150 × 4.5).
EN 1092-1 gives PN 16 the same dimensions as PN 10 in DN 150; only the marking differs.
Reference drawing. The purchase order and EN 1092-1 govern.
Generated at rajendradatacenter.com/flanges/en-1092-1/

Dimension	mm	in
D Outside diameter	285	11.22
d1 Raised face diameter	212	8.35
f1 Raised face height	3	0.12
C2 Flange thickness, raised face included	22	0.87
H2 Length through hub, raised face included	55	2.17
N1 Hub diameter at back face	184	7.24
A Neck outside diameter (pipe OD)	168.3	6.63
S Neck wall thickness (min)	4.5	0.18
B Bore, A - 2S	159.3	6.27
K Bolt circle diameter	240	9.45
L Bolt holes, 8 off	22	0.87

8 bolts M20; holes 22 mm (0.87 in)

RAJENDRA INDUSTRIAL CORPORATION
rajendradatacenter.com
Drawing RIC-EN1092-11-PN16-DN150-B1
Scale 1:3 on A4
Units: mm (inches)
Date 2026-11-22
Quote: rajendradatacenter.com/rfq/
sales@rajendradatacenter.com
+91 74338 71355