**Approx. weight**

| Material | kg | lb |
|---|---|---|
| Carbon steel | 4.4 | 9.7 |
| Stainless steel 304 and 304L | 4.4 | 9.8 |
| Stainless steel 316 and 316L | 4.5 | 9.9 |

Densities 7.85, 7.9 and 8.0 g/cm3.
Calculated from the dimensions as the standard gives them, with no allowance for tolerance.

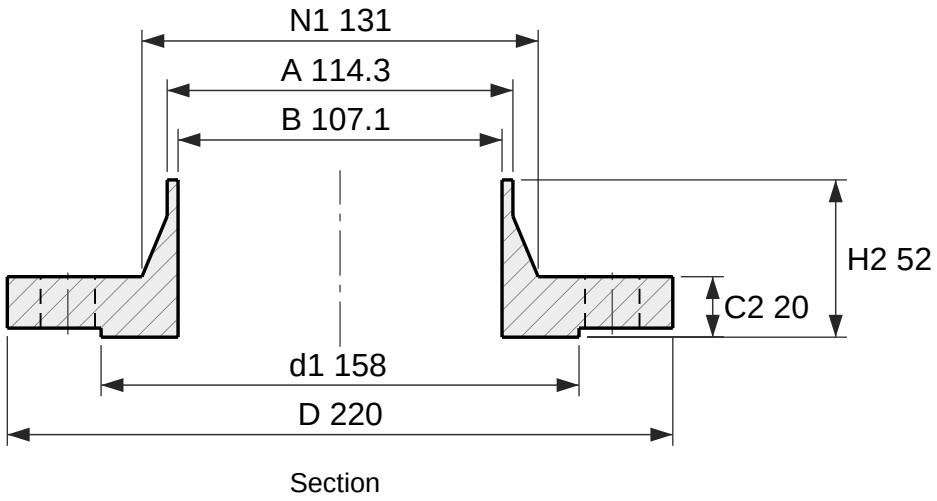


Section

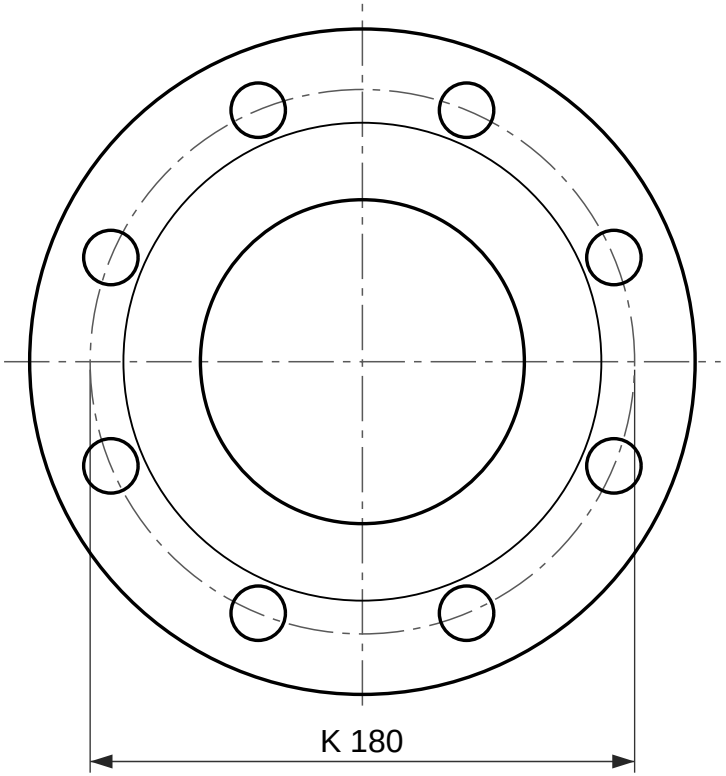


8 holes Ø18

Face view

# Weld neck flange, EN 1092-1 type 11, PN 16

DN 100, facing type B1 (raised face), neck 114.3 × 3.6

Designation: Flange EN 1092-1/11/B1/DN 100/PN 16
Dimensions per EN 1092-1:2018, Table 13 (PN 16) and Table 8 (facing) and Annex A (wall thickness); tolerances per EN 1092-1.
C2 and H2 include the raised face f1, as EN 1092-1 measures it.
S is the minimum neck wall, from Annex A Table A.1; drawn at 3.6 mm. State the pipe wall in the order (for example DN 100 × 3.6).
EN 1092-1 gives PN 16 the same dimensions as PN 10 in DN 100; only the marking differs.
Reference drawing. The purchase order and EN 1092-1 govern.
Generated at rajendradatacenter.com/flanges/en-1092-1/

| Dimension | mm | in |
|---|---|---|
| D Outside diameter | 220 | 8.66 |
| d1 Raised face diameter | 158 | 6.22 |
| f1 Raised face height | 3 | 0.12 |
| C2 Flange thickness, raised face included | 20 | 0.79 |
| H2 Length through hub, raised face included | 52 | 2.05 |
| N1 Hub diameter at back face | 131 | 5.16 |
| A Neck outside diameter (pipe OD) | 114.3 | 4.50 |
| S Neck wall thickness (min) | 3.6 | 0.14 |
| B Bore, A - 2S | 107.1 | 4.22 |
| K Bolt circle diameter | 180 | 7.09 |
| L Bolt holes, 8 off | 18 | 0.71 |

8 bolts M16; holes 18 mm (0.71 in)

RAJENDRA INDUSTRIAL CORPORATION
rajendradatacenter.com
Drawing RIC-EN1092-11-PN16-DN100-B1
Scale 1:2.5 on A4
Units: mm (inches)
Date 2026-11-22
Quote: rajendradatacenter.com/rfq/
sales@rajendradatacenter.com
+91 74338 71355