Approx. weight

Material	kg	lb
Carbon steel	3.1	6.9
Stainless steel 304 and 304L	3.2	7.0
Stainless steel 316 and 316L	3.2	7.1

Densities 7.85, 7.9 and 8.0 g/cm3.
Calculated from the dimensions as the standard gives them, with no allowance for tolerance.

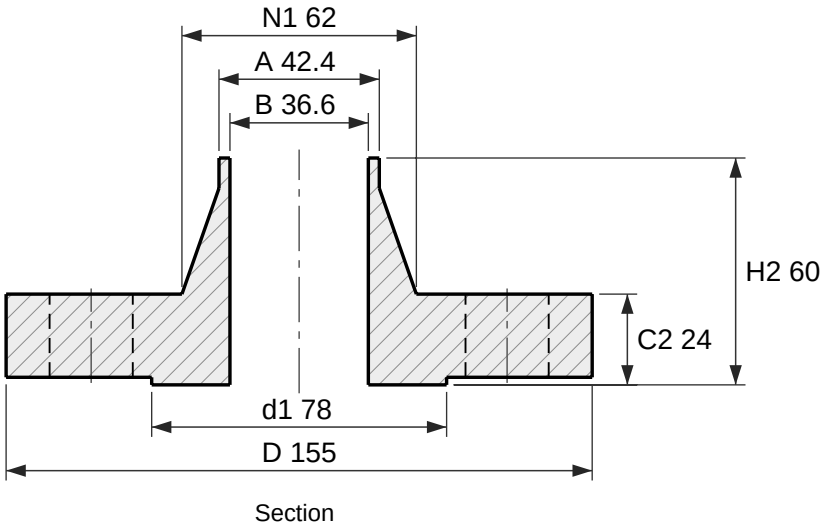

Section

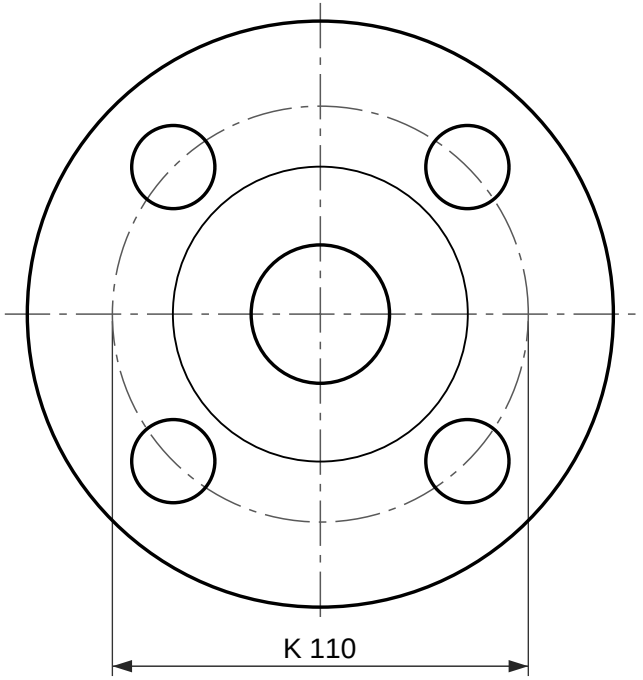

4 holes Ø22

Face view

Weld neck flange, EN 1092-1 type 11, PN 100

DN 32, facing type B1 (raised face), neck 42.4 × 2.9

Designation: Flange EN 1092-1/11/B1/DN 32/PN 100
Dimensions per EN 1092-1:2018, Table 17 (PN 100) and Table 8 (facing) and Annex A (wall thickness); tolerances per EN 1092-1.
C2 and H2 include the raised face f1, as EN 1092-1 measures it.
S is the minimum neck wall, from Annex A Table A.1; drawn at 2.9 mm. State the pipe wall in the order (for example DN 32 × 2.9).
EN 1092-1 gives PN 100 the same dimensions as PN 63 in DN 32; only the marking differs.
Reference drawing. The purchase order and EN 1092-1 govern.
Generated at rajendradatacenter.com/flanges/en-1092-1/

Dimension	mm	in
D Outside diameter	155	6.10
d1 Raised face diameter	78	3.07
f1 Raised face height	2	0.08
C2 Flange thickness, raised face included	24	0.94
H2 Length through hub, raised face included	60	2.36
N1 Hub diameter at back face	62	2.44
A Neck outside diameter (pipe OD)	42.4	1.67
S Neck wall thickness (min)	2.9	0.11
B Bore, A - 2S	36.6	1.44
K Bolt circle diameter	110	4.33
L Bolt holes, 4 off	22	0.87

4 bolts M20; holes 22 mm (0.87 in)

RAJENDRA INDUSTRIAL CORPORATION
rajendradatacenter.com
Drawing RIC-EN1092-11-PN100-DN32-B1
Scale 1:2 on A4
Units: mm (inches)
Date 2026-11-22
Quote: rajendradatacenter.com/rfq/
sales@rajendradatacenter.com
+91 74338 71355