Approx. weight

Material	kg	lb
Carbon steel	49.4	109
Stainless steel 304 and 304L	49.7	109
Stainless steel 316 and 316L	50.3	111

Densities 7.85, 7.9 and 8.0 g/cm3.
Calculated from the dimensions as the standard gives them, with no allowance for tolerance.

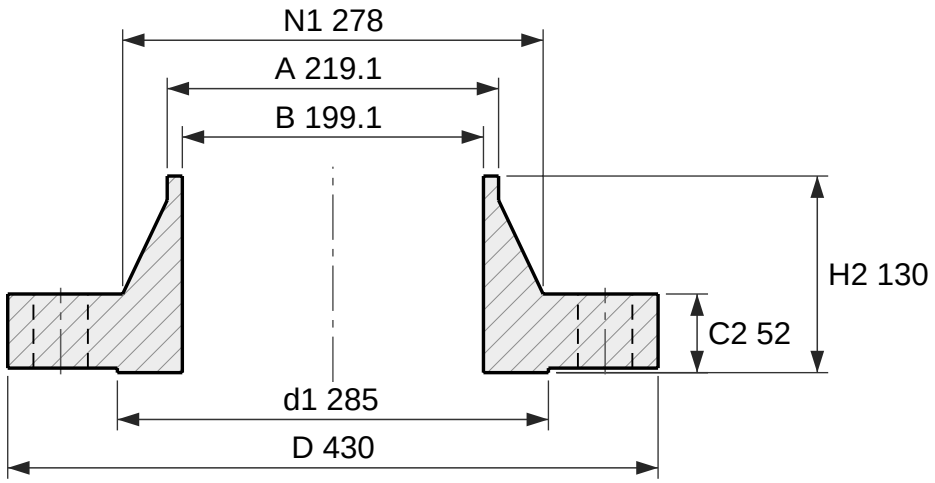

Section

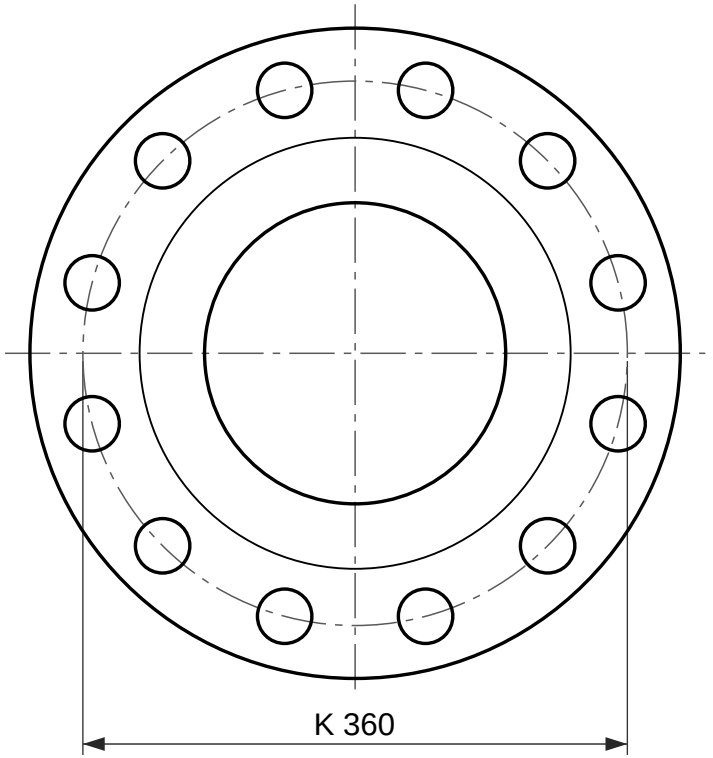

12 holes Ø36

Face view

Weld neck flange, EN 1092-1 type 11, PN 100

DN 200, facing type B1 (raised face), neck 219.1 × 10

Designation: Flange EN 1092-1/11/B1/DN 200/PN 100
Dimensions per EN 1092-1:2018, Table 17 (PN 100) and Table 8 (facing) and Annex A (wall thickness); tolerances per EN 1092-1.
C2 and H2 include the raised face f1, as EN 1092-1 measures it.
S is the minimum neck wall, from Annex A Table A.1; drawn at 10 mm. State the pipe wall in the order (for example DN 200 × 10).
Reference drawing. The purchase order and EN 1092-1 govern.
Generated at rajendradatacenter.com/flanges/en-1092-1/

Dimension	mm	in
D Outside diameter	430	16.93
d1 Raised face diameter	285	11.22
f1 Raised face height	3	0.12
C2 Flange thickness, raised face included	52	2.05
H2 Length through hub, raised face included	130	5.12
N1 Hub diameter at back face	278	10.94
A Neck outside diameter (pipe OD)	219.1	8.63
S Neck wall thickness (min)	10	0.39
B Bore, A - 2S	199.1	7.84
K Bolt circle diameter	360	14.17
L Bolt holes, 12 off	36	1.42

12 bolts M33; holes 36 mm (1.42 in)

RAJENDRA INDUSTRIAL CORPORATION
rajendradatacenter.com
Drawing RIC-EN1092-11-PN100-DN200-B1
Scale 1:5 on A4
Units: mm (inches)
Date 2026-11-22
Quote: rajendradatacenter.com/rfq/
sales@rajendradatacenter.com
+91 74338 71355