Approx. weight

Material	kg	lb
Carbon steel	27.8	61.2
Stainless steel 304 and 304L	27.9	61.6
Stainless steel 316 and 316L	28.3	62.4

Densities 7.85, 7.9 and 8.0 g/cm3.
Calculated from the dimensions as the standard gives them, with no allowance for tolerance.

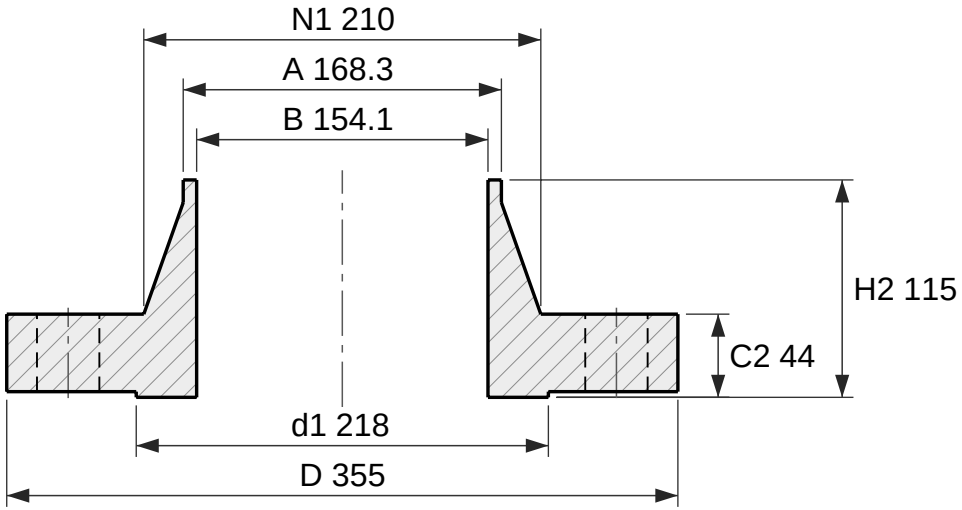

Section

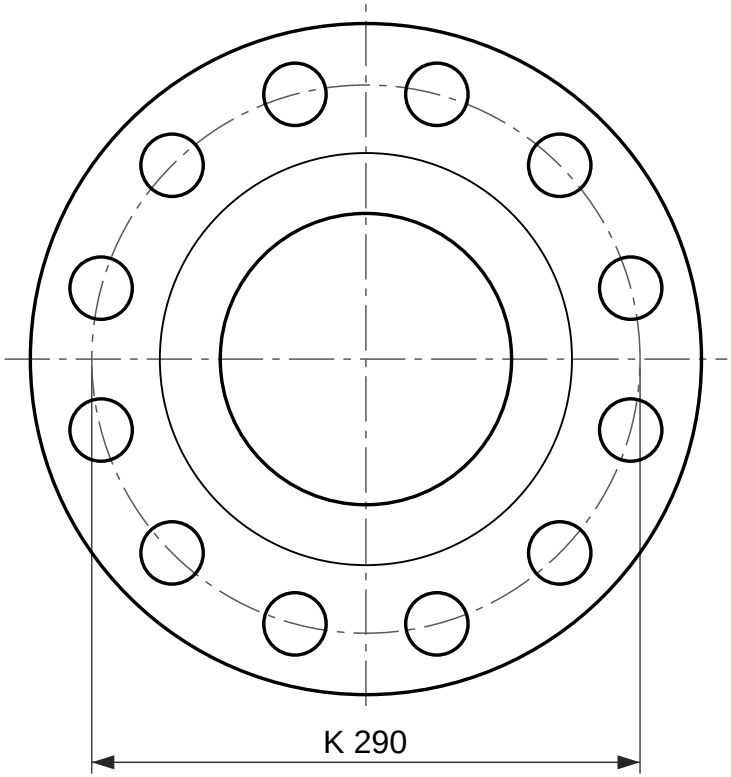

12 holes Ø33

Face view

Weld neck flange, EN 1092-1 type 11, PN 100

DN 150, facing type B1 (raised face), neck 168.3 × 7.1

Designation: Flange EN 1092-1/11/B1/DN 150/PN 100
Dimensions per EN 1092-1:2018, Table 17 (PN 100) and Table 8 (facing) and Annex A (wall thickness); tolerances per EN 1092-1.
C2 and H2 include the raised face f1, as EN 1092-1 measures it.
S is the minimum neck wall, from Annex A Table A.1; drawn at 7.1 mm. State the pipe wall in the order (for example DN 150 × 7.1).
Reference drawing. The purchase order and EN 1092-1 govern.
Generated at rajendradatacenter.com/flanges/en-1092-1/

Dimension	mm	in
D Outside diameter	355	13.98
d1 Raised face diameter	218	8.58
f1 Raised face height	3	0.12
C2 Flange thickness, raised face included	44	1.73
H2 Length through hub, raised face included	115	4.53
N1 Hub diameter at back face	210	8.27
A Neck outside diameter (pipe OD)	168.3	6.63
S Neck wall thickness (min)	7.1	0.28
B Bore, A - 2S	154.1	6.07
K Bolt circle diameter	290	11.42
L Bolt holes, 12 off	33	1.30

12 bolts M30; holes 33 mm (1.30 in)

RAJENDRA INDUSTRIAL CORPORATION
rajendradatacenter.com
Drawing RIC-EN1092-11-PN100-DN150-B1
Scale 1:4 on A4
Units: mm (inches)
Date 2026-11-22
Quote: rajendradatacenter.com/rfq/
sales@rajendradatacenter.com
+91 74338 71355