Approx. weight

Material	kg	lb
Carbon steel	20.7	45.6
Stainless steel 304 and 304L	20.8	45.9
Stainless steel 316 and 316L	21.1	46.5

Densities 7.85, 7.9 and 8.0 g/cm3.
Calculated from the dimensions as the standard gives them, with no allowance for tolerance.

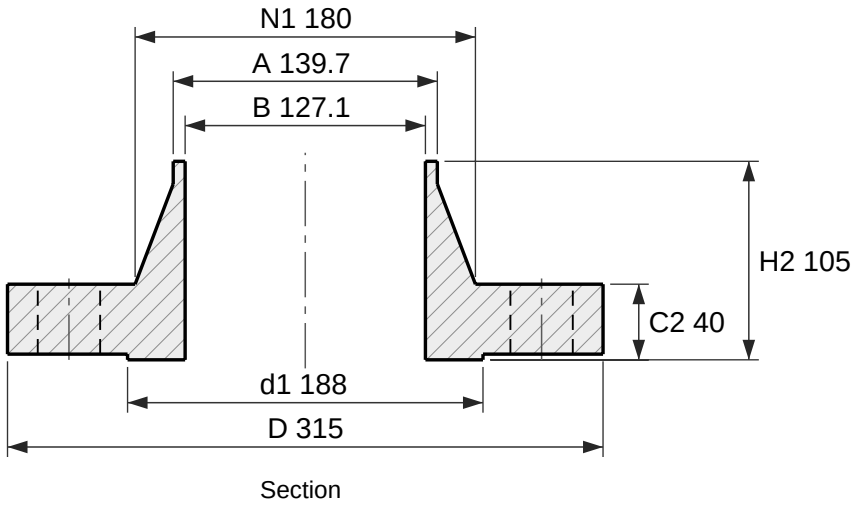

Section

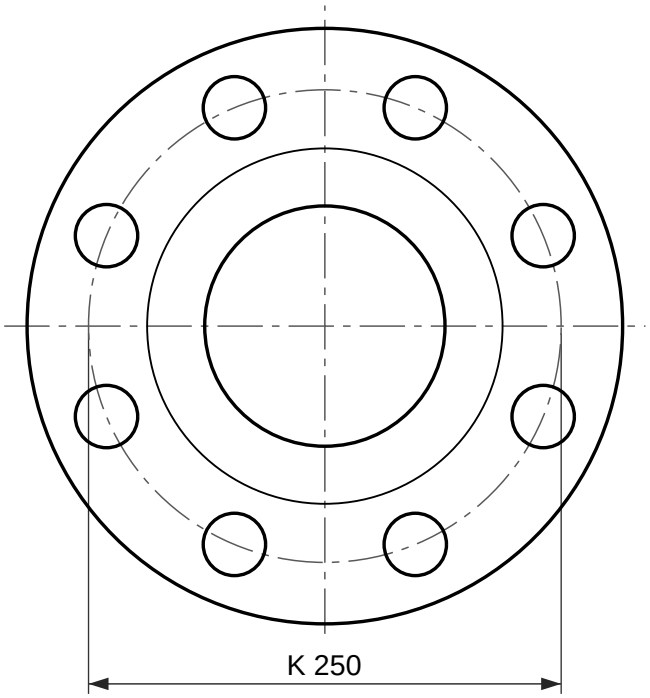

8 holes Ø33

Face view

Weld neck flange, EN 1092-1 type 11, PN 100

DN 125, facing type B1 (raised face), neck 139.7 × 6.3

Designation: Flange EN 1092-1/11/B1/DN 125/PN 100
Dimensions per EN 1092-1:2018, Table 17 (PN 100) and Table 8 (facing) and Annex A (wall thickness); tolerances per EN 1092-1.
C2 and H2 include the raised face f1, as EN 1092-1 measures it.
S is the minimum neck wall, from Annex A Table A.1; drawn at 6.3 mm. State the pipe wall in the order (for example DN 125 × 6.3).
Reference drawing. The purchase order and EN 1092-1 govern.
Generated at rajendradatacenter.com/flanges/en-1092-1/

Dimension	mm	in
D Outside diameter	315	12.40
d1 Raised face diameter	188	7.40
f1 Raised face height	3	0.12
C2 Flange thickness, raised face included	40	1.57
H2 Length through hub, raised face included	105	4.13
N1 Hub diameter at back face	180	7.09
A Neck outside diameter (pipe OD)	139.7	5.50
S Neck wall thickness (min)	6.3	0.25
B Bore, A - 2S	127.1	5.00
K Bolt circle diameter	250	9.84
L Bolt holes, 8 off	33	1.30

8 bolts M30; holes 33 mm (1.30 in)

RAJENDRA INDUSTRIAL CORPORATION
rajendradatacenter.com
Drawing RIC-EN1092-11-PN100-DN125-B1
Scale 1:4 on A4
Units: mm (inches)
Date 2026-11-22
Quote: rajendradatacenter.com/rfq/
sales@rajendradatacenter.com
+91 74338 71355