Approx. weight

Material	kg	lb
Carbon steel	12.8	28.2
Stainless steel 304 and 304L	12.9	28.4
Stainless steel 316 and 316L	13.0	28.7

Densities 7.85, 7.9 and 8.0 g/cm3.
Calculated from the dimensions as the standard gives them, with no allowance for tolerance.

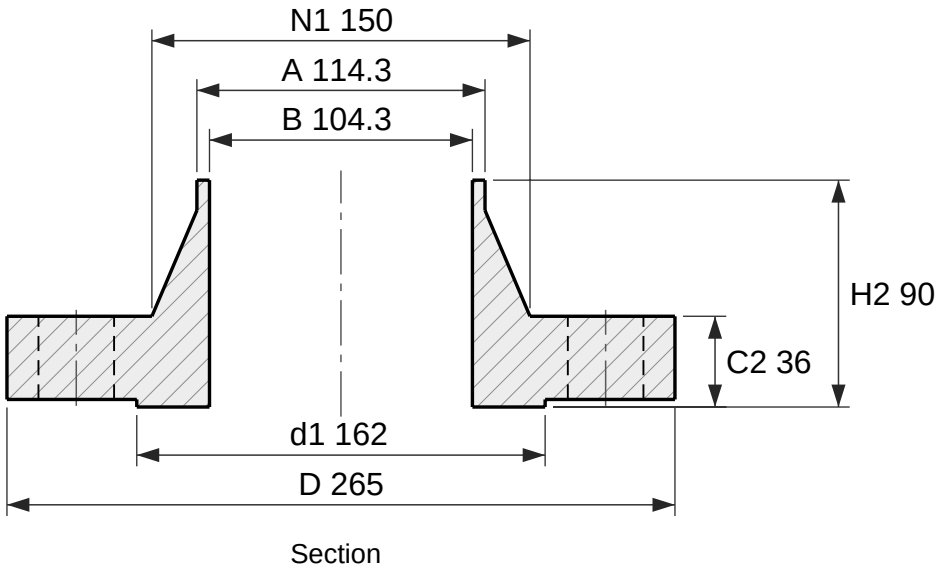

Section

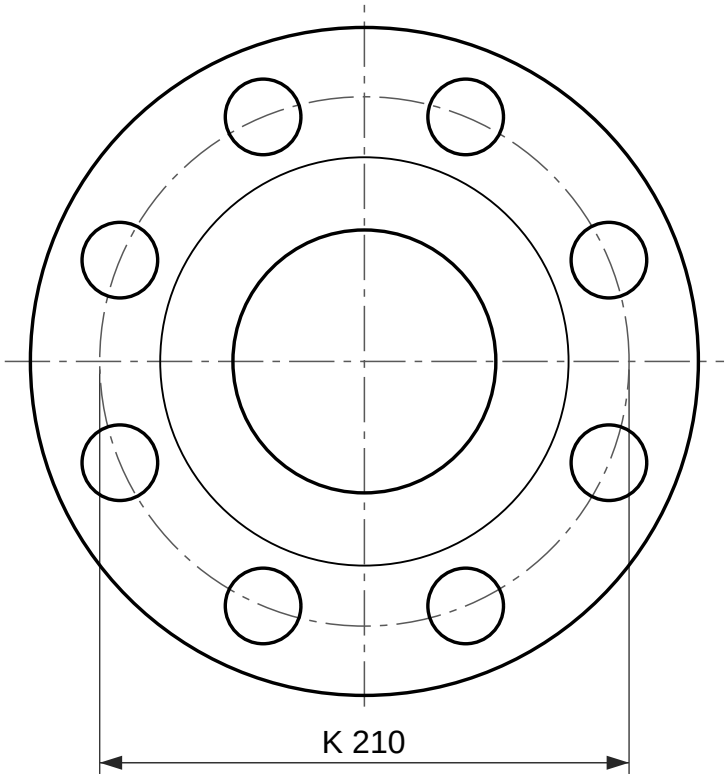

8 holes Ø30

Face view

Weld neck flange, EN 1092-1 type 11, PN 100

DN 100, facing type B1 (raised face), neck 114.3 × 5

Designation: Flange EN 1092-1/11/B1/DN 100/PN 100
Dimensions per EN 1092-1:2018, Table 17 (PN 100) and Table 8 (facing) and Annex A (wall thickness); tolerances per EN 1092-1.
C2 and H2 include the raised face f1, as EN 1092-1 measures it.
S is the minimum neck wall, from Annex A Table A.1; drawn at 5 mm. State the pipe wall in the order (for example DN 100 × 5).
Reference drawing. The purchase order and EN 1092-1 govern.
Generated at rajendradatacenter.com/flanges/en-1092-1/

Dimension	mm	in
D Outside diameter	265	10.43
d1 Raised face diameter	162	6.38
f1 Raised face height	3	0.12
C2 Flange thickness, raised face included	36	1.42
H2 Length through hub, raised face included	90	3.54
N1 Hub diameter at back face	150	5.91
A Neck outside diameter (pipe OD)	114.3	4.50
S Neck wall thickness (min)	5	0.20
B Bore, A - 2S	104.3	4.11
K Bolt circle diameter	210	8.27
L Bolt holes, 8 off	30	1.18

8 bolts M27; holes 30 mm (1.18 in)

RAJENDRA INDUSTRIAL CORPORATION
rajendradatacenter.com
Drawing RIC-EN1092-11-PN100-DN100-B1
Scale 1:3 on A4
Units: mm (inches)
Date 2026-11-22
Quote: rajendradatacenter.com/rfq/
sales@rajendradatacenter.com
+91 74338 71355