Approx. weight

Material	kg	lb
Carbon steel	50.5	111
Stainless steel 304 and 304L	50.9	112
Stainless steel 316 and 316L	51.5	114

Densities 7.85, 7.9 and 8.0 g/cm3.
Calculated from the dimensions as the standard gives them, with no allowance for tolerance.

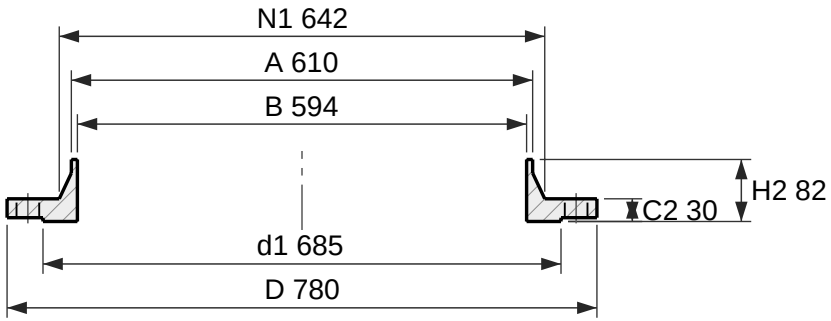

Section

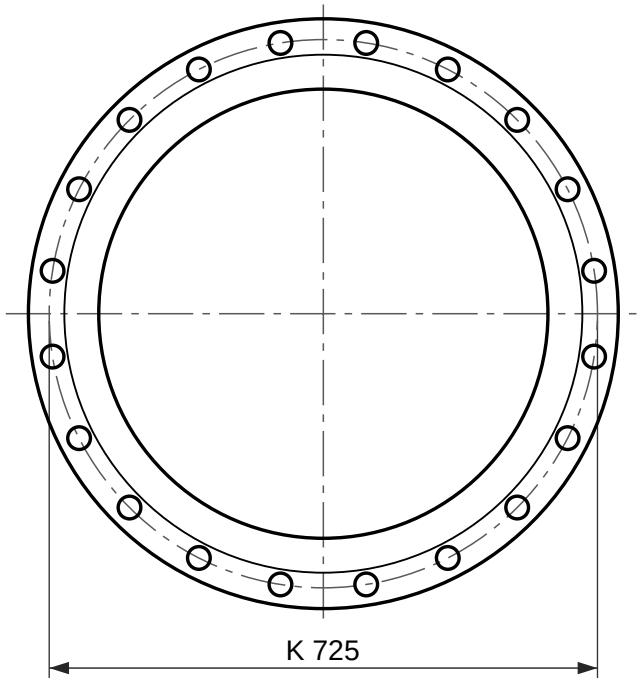

20 holes Ø30
Face view

Weld neck flange, EN 1092-1 type 11, PN 10

DN 600, facing type B1 (raised face), neck 610 × 8

Designation: Flange EN 1092-1/11/B1/DN 600/PN 10
Dimensions per EN 1092-1:2018, Table 12 (PN 10) and Table 8 (facing) and Annex A (wall thickness); tolerances per EN 1092-1.
C2 and H2 include the raised face f1, as EN 1092-1 measures it.
S is the minimum neck wall, from Annex A Table A.1; drawn at 8 mm. State the pipe wall in the order (for example DN 600 × 8).
Reference drawing. The purchase order and EN 1092-1 govern.
Generated at rajendradatacenter.com/flanges/en-1092-1/

Dimension	mm	in
D Outside diameter	780	30.71
d1 Raised face diameter	685	26.97
f1 Raised face height	5	0.20
C2 Flange thickness, raised face included	30	1.18
H2 Length through hub, raised face included	82	3.23
N1 Hub diameter at back face	642	25.28
A Neck outside diameter (pipe OD)	610	24.02
S Neck wall thickness (min)	8	0.31
B Bore, A - 2S	594	23.39
K Bolt circle diameter	725	28.54
L Bolt holes, 20 off	30	1.18

20 bolts M27; holes 30 mm (1.18 in)

RAJENDRA INDUSTRIAL CORPORATION
rajendradatacenter.com
Drawing RIC-EN1092-11-PN10-DN600-B1
Scale 1:10 on A4
Units: mm (inches)
Date 2026-11-22
Quote: rajendradatacenter.com/rfq/
sales@rajendradatacenter.com
+91 74338 71355