Approx. weight

Material	kg	lb
Carbon steel	2.5	5.5
Stainless steel 304 and 304L	2.5	5.5
Stainless steel 316 and 316L	2.5	5.6

Densities 7.85, 7.9 and 8.0 g/cm3.
Calculated from the dimensions as the standard gives them, with no allowance for tolerance.

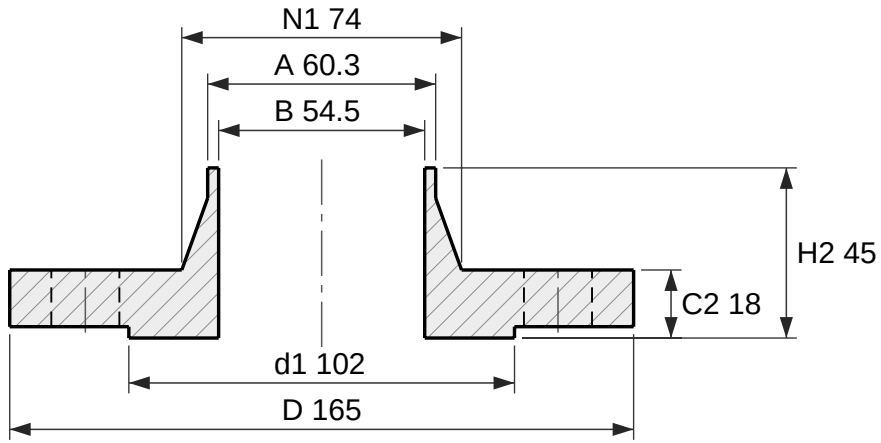

Section

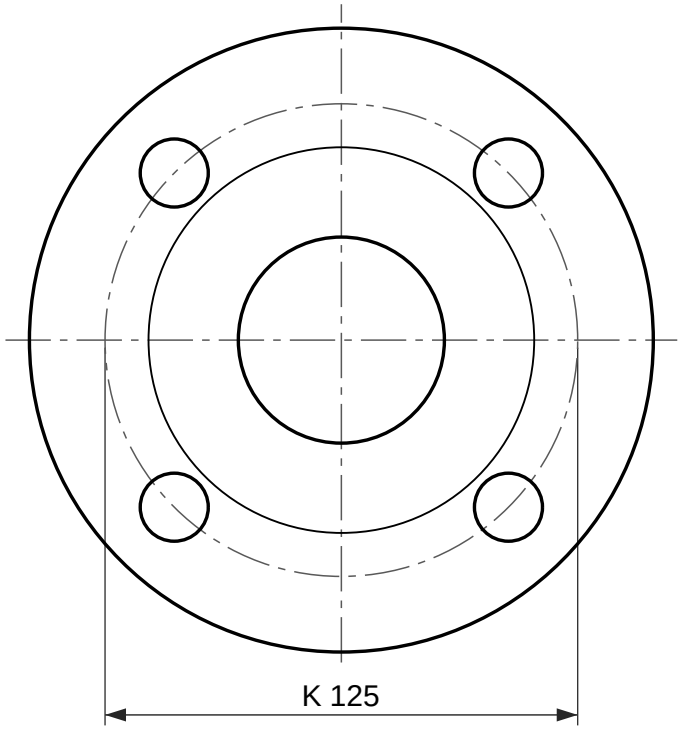

4 holes Ø18

Face view

Weld neck flange, EN 1092-1 type 11, PN 10

DN 50, facing type B1 (raised face), neck 60.3 × 2.9

Designation: Flange EN 1092-1/11/B1/DN 50/PN 10
Dimensions per EN 1092-1:2018, Table 12 (PN 10) and Table 8 (facing) and Annex A (wall thickness); tolerances per EN 1092-1.
C2 and H2 include the raised face f1, as EN 1092-1 measures it.
S is the minimum neck wall, from Annex A Table A.1; drawn at 2.9 mm. State the pipe wall in the order (for example DN 50 × 2.9).
EN 1092-1 gives PN 10 the same dimensions as PN 16 in DN 50; only the marking differs.
Reference drawing. The purchase order and EN 1092-1 govern.
Generated at rajendradatacenter.com/flanges/en-1092-1/

Dimension	mm	in
D Outside diameter	165	6.50
d1 Raised face diameter	102	4.02
f1 Raised face height	3	0.12
C2 Flange thickness, raised face included	18	0.71
H2 Length through hub, raised face included	45	1.77
N1 Hub diameter at back face	74	2.91
A Neck outside diameter (pipe OD)	60.3	2.37
S Neck wall thickness (min)	2.9	0.11
B Bore, A - 2S	54.5	2.15
K Bolt circle diameter	125	4.92
L Bolt holes, 4 off	18	0.71

4 bolts M16; holes 18 mm (0.71 in)

RAJENDRA INDUSTRIAL CORPORATION
rajendradatacenter.com
Drawing RIC-EN1092-11-PN10-DN50-B1
Scale 1:2 on A4
Units: mm (inches)
Date 2026-11-22
Quote: rajendradatacenter.com/rfq/
sales@rajendradatacenter.com
+91 74338 71355