Approx. weight

Material	kg	lb
Carbon steel	28.7	63.3
Stainless steel 304 and 304L	28.9	63.7
Stainless steel 316 and 316L	29.3	64.5

Densities 7.85, 7.9 and 8.0 g/cm3.
Calculated from the dimensions as the standard gives them, with no allowance for tolerance.

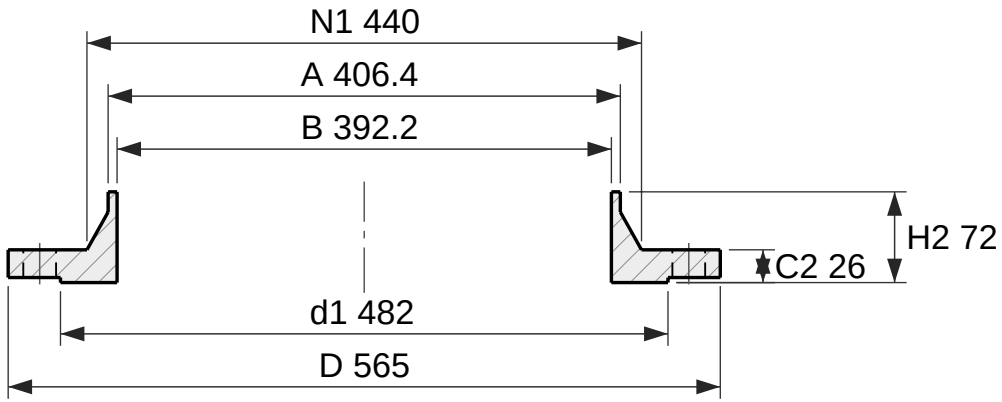

Section

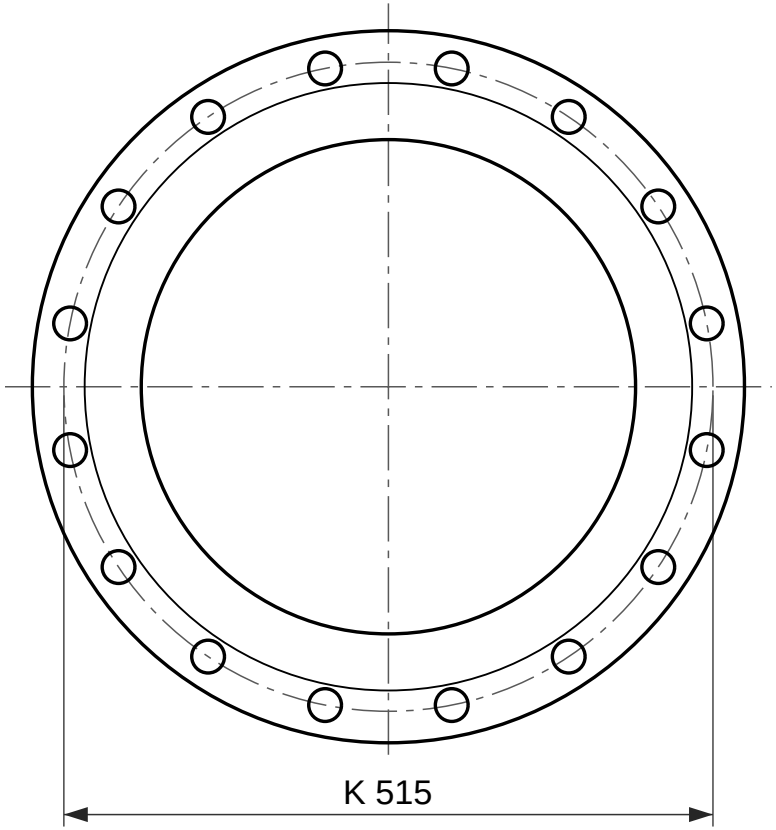

16 holes Ø26

Face view

Weld neck flange, EN 1092-1 type 11, PN 10

DN 400, facing type B1 (raised face), neck 406.4 × 7.1

Designation: Flange EN 1092-1/11/B1/DN 400/PN 10
Dimensions per EN 1092-1:2018, Table 12 (PN 10) and Table 8 (facing) and Annex A (wall thickness); tolerances per EN 1092-1.
C2 and H2 include the raised face f1, as EN 1092-1 measures it.
S is the minimum neck wall, from Annex A Table A.1; drawn at 7.1 mm. State the pipe wall in the order (for example DN 400 × 7.1).
Reference drawing. The purchase order and EN 1092-1 govern.
Generated at rajendradatacenter.com/flanges/en-1092-1/

Dimension	mm	in
D Outside diameter	565	22.24
d1 Raised face diameter	482	18.98
f1 Raised face height	4	0.16
C2 Flange thickness, raised face included	26	1.02
H2 Length through hub, raised face included	72	2.83
N1 Hub diameter at back face	440	17.32
A Neck outside diameter (pipe OD)	406.4	16.00
S Neck wall thickness (min)	7.1	0.28
B Bore, A - 2S	392.2	15.44
K Bolt circle diameter	515	20.28
L Bolt holes, 16 off	26	1.02

16 bolts M24; holes 26 mm (1.02 in)

RAJENDRA INDUSTRIAL CORPORATION
rajendradatacenter.com
Drawing RIC-EN1092-11-PN10-DN400-B1
Scale 1:6 on A4
Units: mm (inches)
Date 2026-11-22
Quote: rajendradatacenter.com/rfq/
sales@rajendradatacenter.com
+91 74338 71355