Approx. weight

Material	kg	lb
Carbon steel	1.3	2.8
Stainless steel 304 and 304L	1.3	2.8
Stainless steel 316 and 316L	1.3	2.9

Densities 7.85, 7.9 and 8.0 g/cm3.
Calculated from the dimensions as the standard gives them, with no allowance for tolerance.

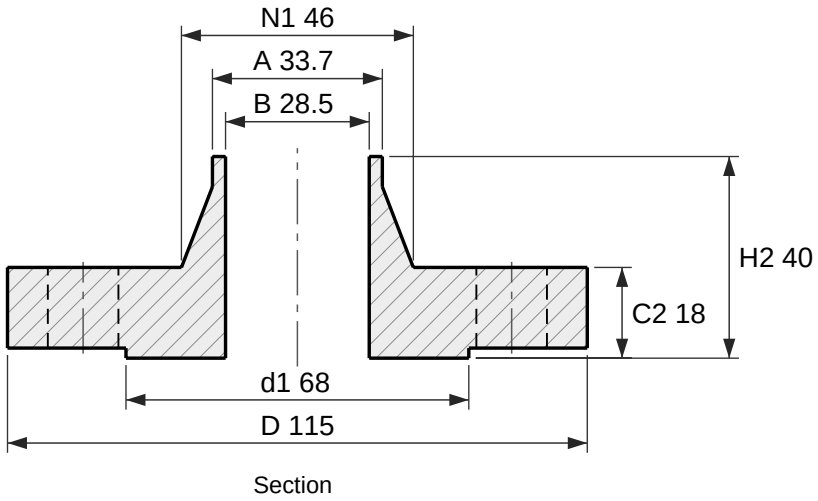

Section

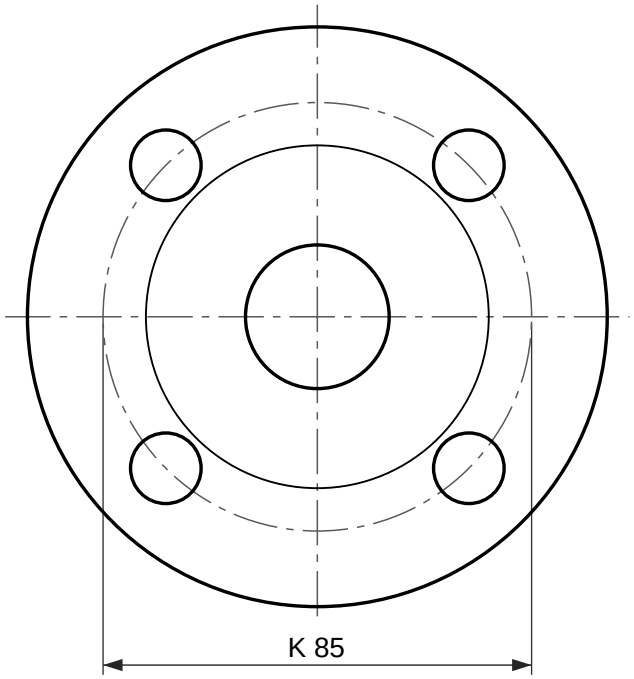

4 holes Ø14
Face view

Weld neck flange, EN 1092-1 type 11, PN 10

DN 25, facing type B1 (raised face), neck 33.7 × 2.6

Designation: Flange EN 1092-1/11/B1/DN 25/PN 10
Dimensions per EN 1092-1:2018, Table 12 (PN 10) and Table 8 (facing) and Annex A (wall thickness); tolerances per EN 1092-1.
C2 and H2 include the raised face f1, as EN 1092-1 measures it.
S is the minimum neck wall, from Annex A Table A.1; drawn at 2.6 mm. State the pipe wall in the order (for example DN 25 × 2.6).
EN 1092-1 gives PN 10 the same dimensions as PN 16, PN 25, PN 40 in DN 25; only the marking differs.
Reference drawing. The purchase order and EN 1092-1 govern.
Generated at rajendradatacenter.com/flanges/en-1092-1/

Dimension	mm	in
D Outside diameter	115	4.53
d1 Raised face diameter	68	2.68
f1 Raised face height	2	0.08
C2 Flange thickness, raised face included	18	0.71
H2 Length through hub, raised face included	40	1.57
N1 Hub diameter at back face	46	1.81
A Neck outside diameter (pipe OD)	33.7	1.33
S Neck wall thickness (min)	2.6	0.10
B Bore, A - 2S	28.5	1.12
K Bolt circle diameter	85	3.35
L Bolt holes, 4 off	14	0.55

4 bolts M12; holes 14 mm (0.55 in)

RAJENDRA INDUSTRIAL CORPORATION
rajendradatacenter.com
Drawing RIC-EN1092-11-PN10-DN25-B1
Scale 1:1.5 on A4
Units: mm (inches)
Date 2026-11-22
Quote: rajendradatacenter.com/rfq/
sales@rajendradatacenter.com
+91 74338 71355