Approx. weight

Material	kg	lb
Carbon steel	23.3	51.4
Stainless steel 304 and 304L	23.5	51.7
Stainless steel 316 and 316L	23.8	52.4

Densities 7.85, 7.9 and 8.0 g/cm3.
Calculated from the dimensions as the standard gives them, with no allowance for tolerance.

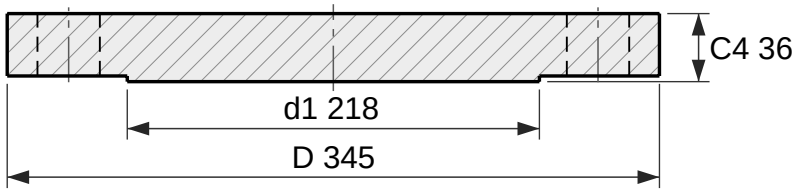

Section

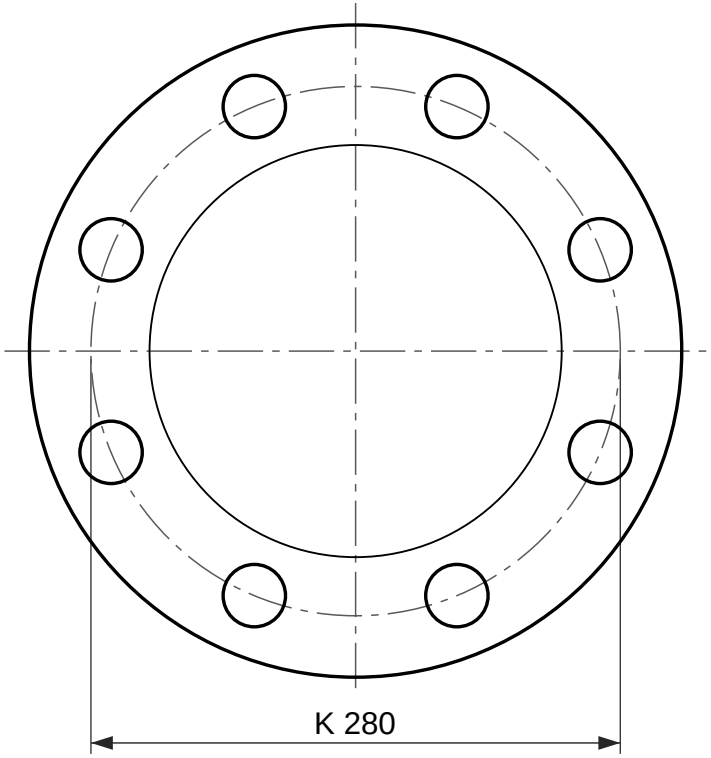

8 holes Ø33

Face view

Blind flange, EN 1092-1 type 05, PN 63

DN 150, facing type B1 (raised face)

Designation: Flange EN 1092-1/05/B1/DN 150/PN 63
Dimensions per EN 1092-1:2018, Table 16 (PN 63) and Table 8 (facing); tolerances per EN 1092-1.
C4 includes the raised face f1, as EN 1092-1 measures it.
Reference drawing. The purchase order and EN 1092-1 govern.
Generated at rajendradatacenter.com/flanges/en-1092-1/

Dimension	mm	in
D Outside diameter	345	13.58
d1 Raised face diameter	218	8.58
f1 Raised face height	3	0.12
C4 Flange thickness, raised face included	36	1.42
K Bolt circle diameter	280	11.02
L Bolt holes, 8 off	33	1.30

8 bolts M30; holes 33 mm (1.30 in)

RAJENDRA INDUSTRIAL CORPORATION
rajendradatacenter.com
Drawing RIC-EN1092-05-PN63-DN150-B1
Scale 1:4 on A4
Units: mm (inches)
Date 2026-11-22
Quote: rajendradatacenter.com/rfq/
sales@rajendradatacenter.com
+91 74338 71355