Approx. weight

Material	kg	lb
Carbon steel	15.9	35.1
Stainless steel 304 and 304L	16.0	35.3
Stainless steel 316 and 316L	16.2	35.7

Densities 7.85, 7.9 and 8.0 g/cm3.
Calculated from the dimensions as the standard gives them, with no allowance for tolerance.

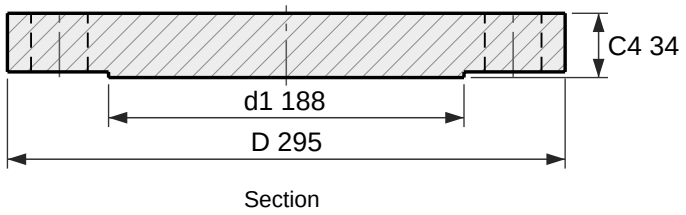

Section

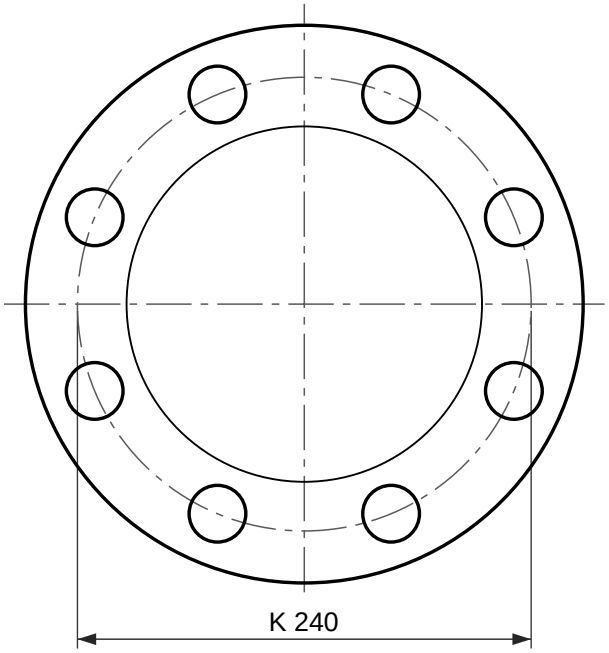

8 holes Ø30
Face view

Blind flange, EN 1092-1 type 05, PN 63

DN 125, facing type B1 (raised face)

Designation: Flange EN 1092-1/05/B1/DN 125/PN 63
Dimensions per EN 1092-1:2018, Table 16 (PN 63) and Table 8 (facing); tolerances per EN 1092-1.
C4 includes the raised face f1, as EN 1092-1 measures it.
Reference drawing. The purchase order and EN 1092-1 govern.
Generated at rajendradatacenter.com/flanges/en-1092-1/

Dimension	mm	in
D Outside diameter	295	11.61
d1 Raised face diameter	188	7.40
f1 Raised face height	3	0.12
C4 Flange thickness, raised face included	34	1.34
K Bolt circle diameter	240	9.45
L Bolt holes, 8 off	30	1.18

8 bolts M27; holes 30 mm (1.18 in)

RAJENDRA INDUSTRIAL CORPORATION
rajendradatacenter.com
Drawing RIC-EN1092-05-PN63-DN125-B1
Scale 1:4 on A4
Units: mm (inches)
Date 2026-11-22
Quote: rajendradatacenter.com/rfq/
sales@rajendradatacenter.com
+91 74338 71355