Approx. weight

Material	kg	lb
Carbon steel	127	280
Stainless steel 304 and 304L	128	281
Stainless steel 316 and 316L	129	285

Densities 7.85, 7.9 and 8.0 g/cm3.
Calculated from the dimensions as the standard gives them, with no allowance for tolerance.

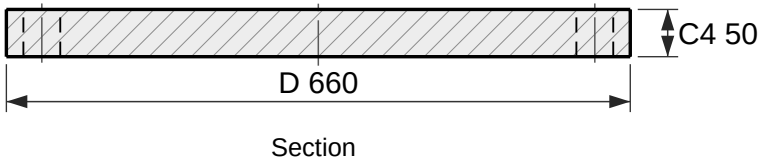

Section

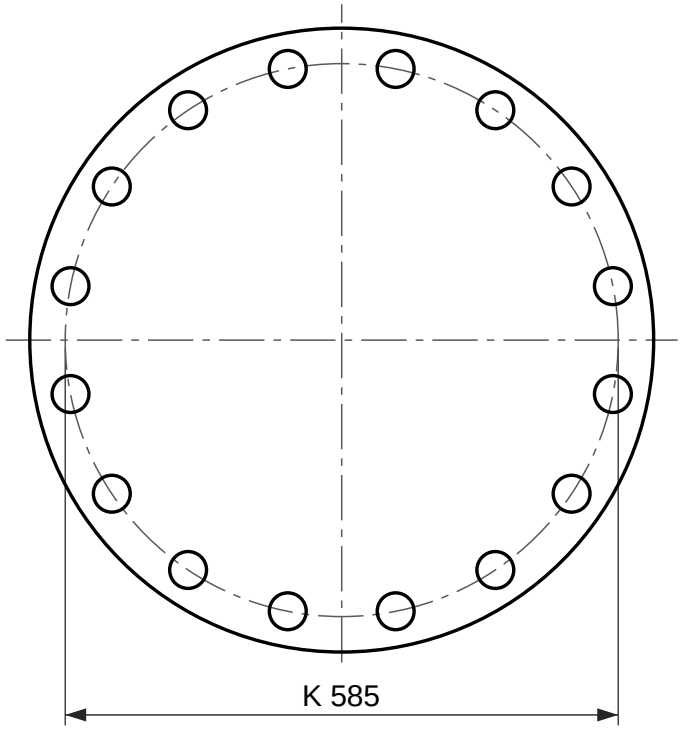

16 holes Ø39

Face view

Blind flange, EN 1092-1 type 05, PN 40

DN 400, facing type A (flat face)

Designation: Flange EN 1092-1/05/A/DN 400/PN 40
Dimensions per EN 1092-1:2018, Table 15 (PN 40) and Table 8 (facing); tolerances per EN 1092-1.
Facing type A (flat face), as 5.7.2.3 gives this type unless the order says otherwise.
Reference drawing. The purchase order and EN 1092-1 govern.
Generated at rajendradatacenter.com/flanges/en-1092-1/

Dimension	mm	in
D Outside diameter	660	25.98
C4 Flange thickness	50	1.97
K Bolt circle diameter	585	23.03
L Bolt holes, 16 off	39	1.54

16 bolts M36; holes 39 mm (1.54 in)

RAJENDRA INDUSTRIAL CORPORATION
rajendradatacenter.com
Drawing RIC-EN1092-05-PN40-DN400-A
Scale 1:8 on A4
Units: mm (inches)
Date 2026-11-22
Quote: rajendradatacenter.com/rfq/
sales@rajendradatacenter.com
+91 74338 71355