**Approx. weight**

| Material | kg | lb |
|---|---|---|
| Carbon steel | 89.5 | 197 |
| Stainless steel 304 and 304L | 90.1 | 199 |
| Stainless steel 316 and 316L | 91.2 | 201 |

Densities 7.85, 7.9 and 8.0 g/cm3.
Calculated from the dimensions as the standard gives them, with no allowance for tolerance.

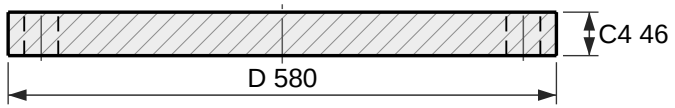


Section

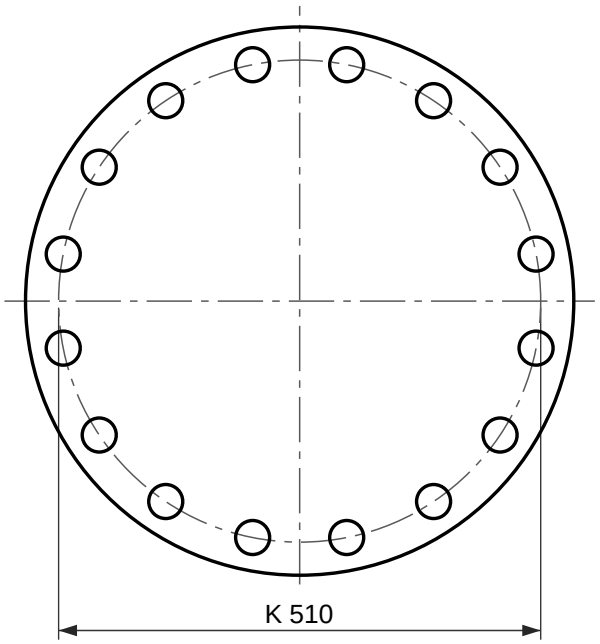


16 holes Ø36

Face view

# Blind flange, EN 1092-1 type 05, PN 40

DN 350, facing type A (flat face)

Designation: Flange EN 1092-1/05/A/DN 350/PN 40
Dimensions per EN 1092-1:2018, Table 15 (PN 40) and Table 8 (facing); tolerances per EN 1092-1.
Facing type A (flat face), as 5.7.2.3 gives this type unless the order says otherwise.
Reference drawing. The purchase order and EN 1092-1 govern.
Generated at rajendradatacenter.com/flanges/en-1092-1/

| Dimension | mm | in |
|---|---|---|
| D Outside diameter | 580 | 22.83 |
| C4 Flange thickness | 46 | 1.81 |
| K Bolt circle diameter | 510 | 20.08 |
| L Bolt holes, 16 off | 36 | 1.42 |

16 bolts M33; holes 36 mm (1.42 in)

RAJENDRA INDUSTRIAL CORPORATION
rajendradatacenter.com
Drawing RIC-EN1092-05-PN40-DN350-A
Scale 1:8 on A4
Units: mm (inches)
Date 2026-11-22
Quote: rajendradatacenter.com/rfq/
sales@rajendradatacenter.com
+91 74338 71355