Approx. weight

Material	kg	lb
Carbon steel	14.6	32.2
Stainless steel 304 and 304L	14.7	32.4
Stainless steel 316 and 316L	14.9	32.8

Densities 7.85, 7.9 and 8.0 g/cm3.
Calculated from the dimensions as the standard gives them, with no allowance for tolerance.

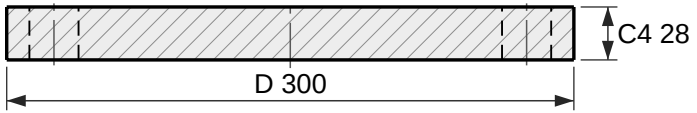

Section

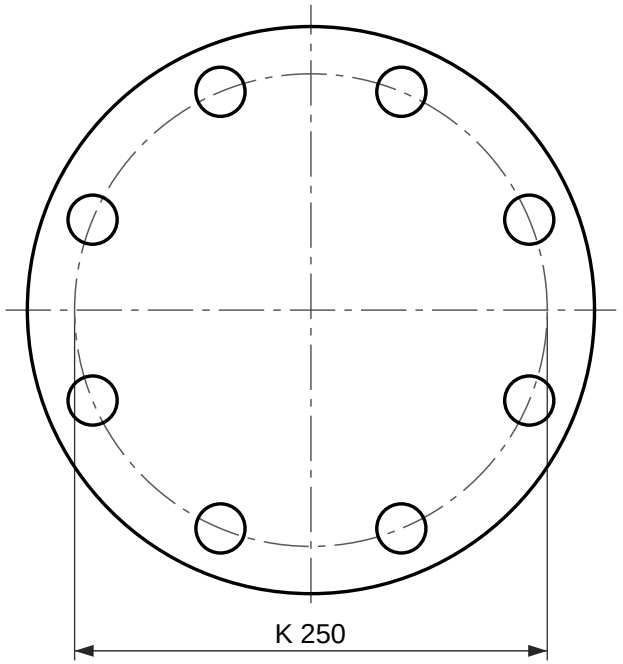

8 holes Ø26

Face view

Blind flange, EN 1092-1 type 05, PN 40

DN 150, facing type A (flat face)

Designation: Flange EN 1092-1/05/A/DN 150/PN 40
Dimensions per EN 1092-1:2018, Table 15 (PN 40) and Table 8 (facing); tolerances per EN 1092-1.
Facing type A (flat face), as 5.7.2.3 gives this type unless the order says otherwise.
EN 1092-1 gives PN 40 the same dimensions as PN 25 in DN 150; only the marking differs.
Reference drawing. The purchase order and EN 1092-1 govern.
Generated at rajendradatacenter.com/flanges/en-1092-1/

Dimension	mm	in
D Outside diameter	300	11.81
C4 Flange thickness	28	1.10
K Bolt circle diameter	250	9.84
L Bolt holes, 8 off	26	1.02

8 bolts M24; holes 26 mm (1.02 in)

RAJENDRA INDUSTRIAL CORPORATION
rajendradatacenter.com
Drawing RIC-EN1092-05-PN40-DN150-A
Scale 1:4 on A4
Units: mm (inches)
Date 2026-11-22
Quote: rajendradatacenter.com/rfq/
sales@rajendradatacenter.com
+91 74338 71355