**Approx. weight**

| Material | kg | lb |
|---|---|---|
| Carbon steel | 10.8 | 23.9 |
| Stainless steel 304 and 304L | 10.9 | 24.0 |
| Stainless steel 316 and 316L | 11.0 | 24.3 |

Densities 7.85, 7.9 and 8.0 g/cm3.
Calculated from the dimensions as the standard gives them, with no allowance for tolerance.

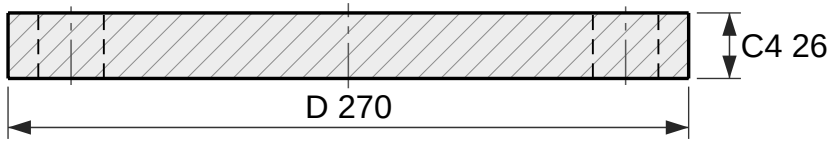


Section

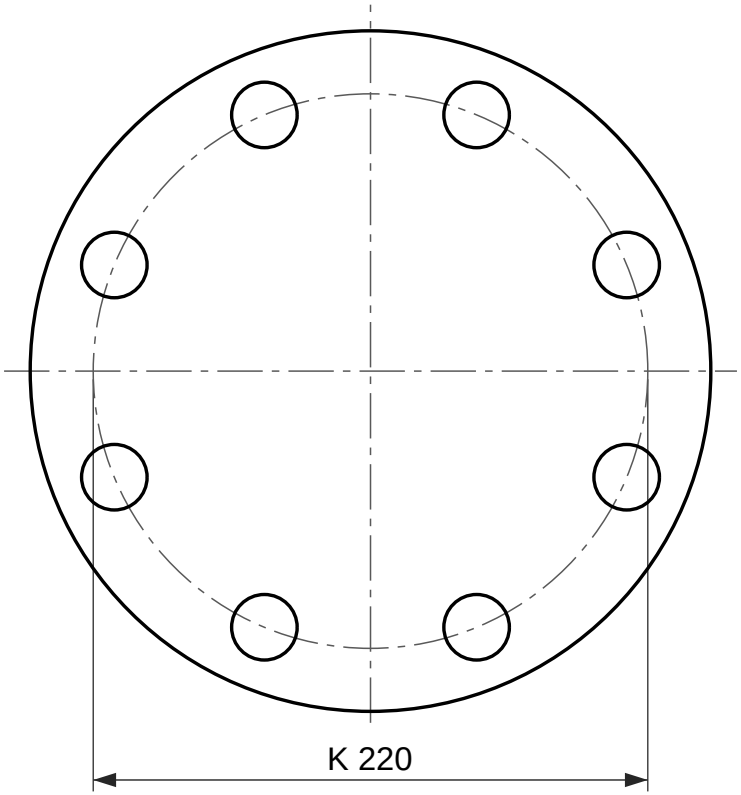


8 holes Ø26

Face view

# Blind flange, EN 1092-1 type 05, PN 25

DN 125, facing type A (flat face)

Designation: Flange EN 1092-1/05/A/DN 125/PN 25
Dimensions per EN 1092-1:2018, Table 14 (PN 25) and Table 8 (facing); tolerances per EN 1092-1.
Facing type A (flat face), as 5.7.2.3 gives this type unless the order says otherwise.
EN 1092-1 gives PN 25 the same dimensions as PN 40 in DN 125; only the marking differs.
Reference drawing. The purchase order and EN 1092-1 govern.
Generated at rajendradatacenter.com/flanges/en-1092-1/

| Dimension | mm | in |
|---|---|---|
| D Outside diameter | 270 | 10.63 |
| C4 Flange thickness | 26 | 1.02 |
| K Bolt circle diameter | 220 | 8.66 |
| L Bolt holes, 8 off | 26 | 1.02 |

8 bolts M24; holes 26 mm (1.02 in)

RAJENDRA INDUSTRIAL CORPORATION
rajendradatacenter.com
Drawing RIC-EN1092-05-PN25-DN125-A
Scale 1:3 on A4
Units: mm (inches)
Date 2026-11-22
Quote: rajendradatacenter.com/rfq/
sales@rajendradatacenter.com
+91 74338 71355