**Approx. weight**

| Material | kg | lb |
|---|---|---|
| Carbon steel | 4.6 | 10.2 |
| Stainless steel 304 and 304L | 4.6 | 10.2 |
| Stainless steel 316 and 316L | 4.7 | 10.4 |

Densities 7.85, 7.9 and 8.0 g/cm3.
Calculated from the dimensions as the standard gives them, with no allowance for tolerance.

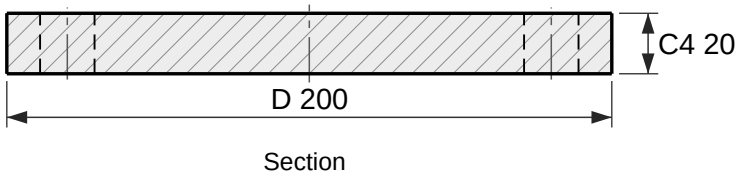


Section

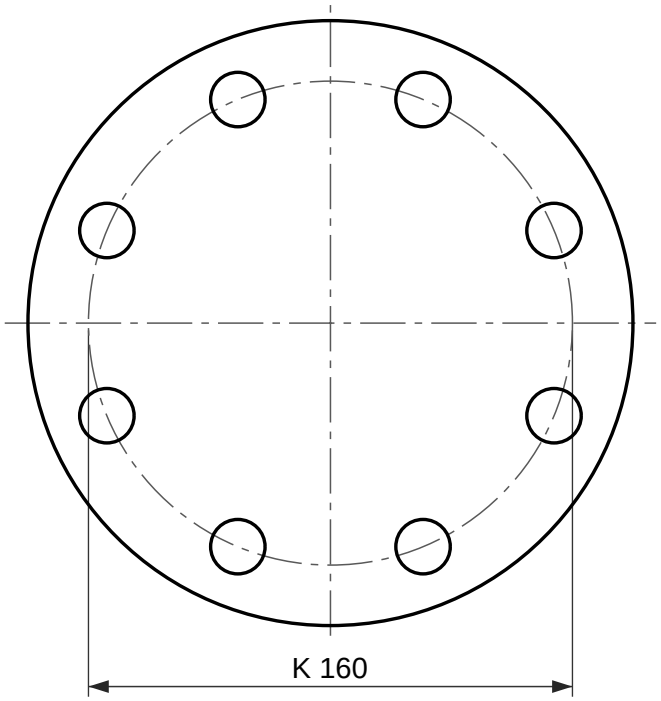


8 holes Ø18

Face view

# Blind flange, EN 1092-1 type 05, PN 16

DN 80, facing type A (flat face)

Designation: Flange EN 1092-1/05/A/DN 80/PN 16
Dimensions per EN 1092-1:2018, Table 13 (PN 16) and Table 8 (facing); tolerances per EN 1092-1.
Facing type A (flat face), as 5.7.2.3 gives this type unless the order says otherwise.
EN 1092-1 gives PN 16 the same dimensions as PN 10 in DN 80; only the marking differs.
Reference drawing. The purchase order and EN 1092-1 govern.
Generated at rajendradatacenter.com/flanges/en-1092-1/

| Dimension | mm | in |
|---|---|---|
| D Outside diameter | 200 | 7.87 |
| C4 Flange thickness | 20 | 0.79 |
| K Bolt circle diameter | 160 | 6.30 |
| L Bolt holes, 8 off | 18 | 0.71 |

8 bolts M16; holes 18 mm (0.71 in)

RAJENDRA INDUSTRIAL CORPORATION
rajendradatacenter.com
Drawing RIC-EN1092-05-PN16-DN80-A
Scale 1:2.5 on A4
Units: mm (inches)
Date 2026-11-22
Quote: rajendradatacenter.com/rfq/
sales@rajendradatacenter.com
+91 74338 71355