Approx. weight

Material	kg	lb
Carbon steel	1.4	3.0
Stainless steel 304 and 304L	1.4	3.1
Stainless steel 316 and 316L	1.4	3.1

Densities 7.85, 7.9 and 8.0 g/cm3.
Calculated from the dimensions as the standard gives them, with no allowance for tolerance.

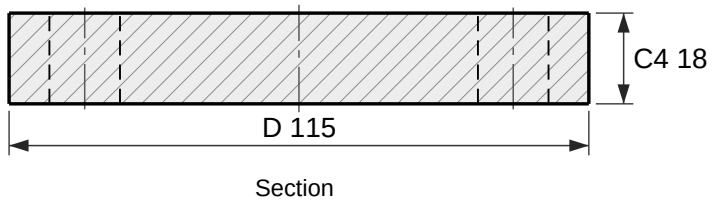

Section

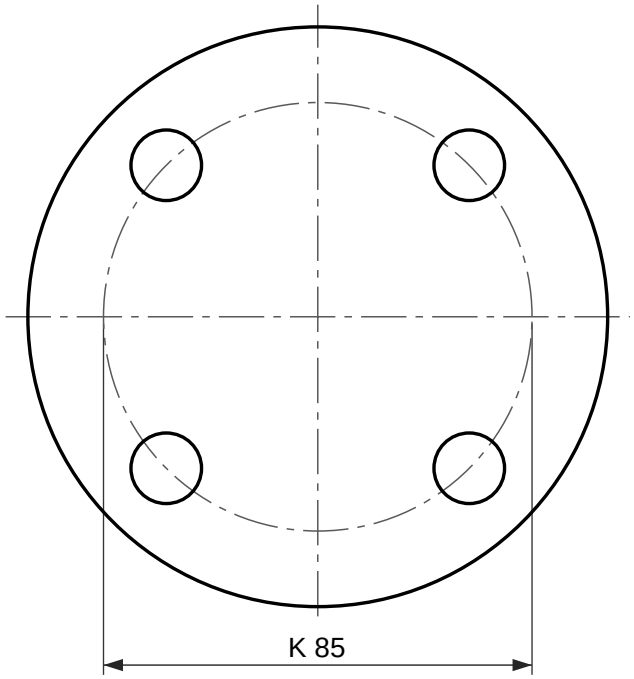

4 holes Ø14

Face view

Blind flange, EN 1092-1 type 05, PN 16

DN 25, facing type A (flat face)

Designation: Flange EN 1092-1/05/A/DN 25/PN 16
Dimensions per EN 1092-1:2018, Table 13 (PN 16) and Table 8 (facing); tolerances per EN 1092-1.
Facing type A (flat face), as 5.7.2.3 gives this type unless the order says otherwise.
EN 1092-1 gives PN 16 the same dimensions as PN 10, PN 25, PN 40 in DN 25; only the marking differs.
Reference drawing. The purchase order and EN 1092-1 govern.
Generated at rajendradatacenter.com/flanges/en-1092-1/

Dimension	mm	in
D Outside diameter	115	4.53
C4 Flange thickness	18	0.71
K Bolt circle diameter	85	3.35
L Bolt holes, 4 off	14	0.55

4 bolts M12; holes 14 mm (0.55 in)

RAJENDRA INDUSTRIAL CORPORATION

rajendradatacenter.com
Drawing RIC-EN1092-05-PN16-DN25-A
Scale 1:1.5 on A4
Units: mm (inches)
Date 2026-11-22
Quote: rajendradatacenter.com/rfq/
sales@rajendradatacenter.com
+91 74338 71355