Approx. weight

Material	kg	lb
Carbon steel	5.6	12.4
Stainless steel 304 and 304L	5.7	12.5
Stainless steel 316 and 316L	5.7	12.7

Densities 7.85, 7.9 and 8.0 g/cm3.
Calculated from the dimensions as the standard gives them, with no allowance for tolerance.

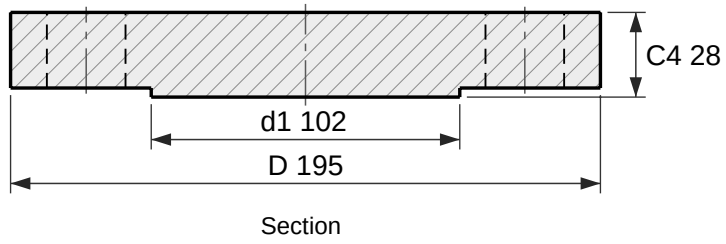

Section

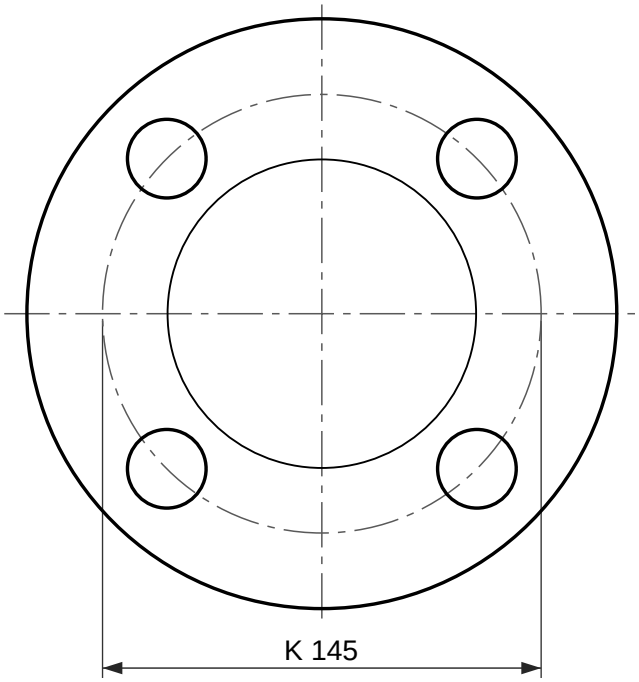

4 holes Ø26

Face view

Blind flange, EN 1092-1 type 05, PN 100

DN 50, facing type B1 (raised face)

Designation: Flange EN 1092-1/05/B1/DN 50/PN 100
Dimensions per EN 1092-1:2018, Table 17 (PN 100) and Table 8 (facing); tolerances per EN 1092-1.
C4 includes the raised face f1, as EN 1092-1 measures it.
Reference drawing. The purchase order and EN 1092-1 govern.
Generated at rajendradatacenter.com/flanges/en-1092-1/

Dimension	mm	in
D Outside diameter	195	7.68
d1 Raised face diameter	102	4.02
f1 Raised face height	3	0.12
C4 Flange thickness, raised face included	28	1.10
K Bolt circle diameter	145	5.71
L Bolt holes, 4 off	26	1.02

4 bolts M24; holes 26 mm (1.02 in)

RAJENDRA INDUSTRIAL CORPORATION
rajendradatacenter.com
Drawing RIC-EN1092-05-PN100-DN50-B1
Scale 1:2.5 on A4
Units: mm (inches)
Date 2026-11-22
Quote: rajendradatacenter.com/rfq/
sales@rajendradatacenter.com
+91 74338 71355