Approx. weight

Material	kg	lb
Carbon steel	1.2	2.6
Stainless steel 304 and 304L	1.2	2.6
Stainless steel 316 and 316L	1.2	2.6

Densities 7.85, 7.9 and 8.0 g/cm3.
Calculated from the dimensions as the standard gives them, with no allowance for tolerance.

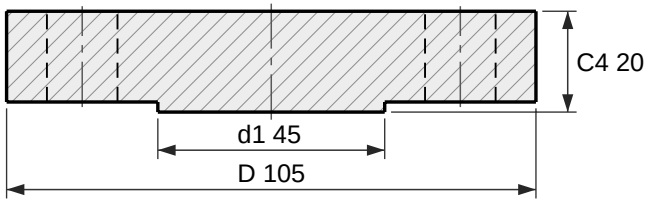

Section

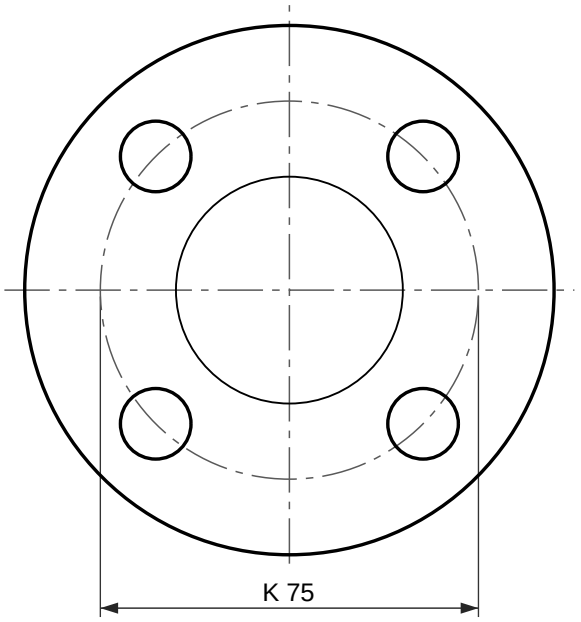

4 holes Ø14

Face view

Blind flange, EN 1092-1 type 05, PN 100

DN 15, facing type B1 (raised face)

Designation: Flange EN 1092-1/05/B1/DN 15/PN 100
Dimensions per EN 1092-1:2018, Table 17 (PN 100) and Table 8 (facing); tolerances per EN 1092-1.
C4 includes the raised face f1, as EN 1092-1 measures it.
EN 1092-1 gives PN 100 the same dimensions as PN 63 in DN 15; only the marking differs.
Reference drawing. The purchase order and EN 1092-1 govern.
Generated at rajendradatacenter.com/flanges/en-1092-1/

Dimension	mm	in
D Outside diameter	105	4.13
d1 Raised face diameter	45	1.77
f1 Raised face height	2	0.08
C4 Flange thickness, raised face included	20	0.79
K Bolt circle diameter	75	2.95
L Bolt holes, 4 off	14	0.55

4 bolts M12; holes 14 mm (0.55 in)

RAJENDRA INDUSTRIAL CORPORATION
rajendradatacenter.com
Drawing RIC-EN1092-05-PN100-DN15-B1
Scale 1:1.5 on A4
Units: mm (inches)
Date 2026-11-22
Quote: rajendradatacenter.com/rfq/
sales@rajendradatacenter.com
+91 74338 71355