**Approx. weight**

| Material | kg | lb |
|---|---|---|
| Carbon steel | 75.2 | 166 |
| Stainless steel 304 and 304L | 75.6 | 167 |
| Stainless steel 316 and 316L | 76.6 | 169 |

Densities 7.85, 7.9 and 8.0 g/cm3.
Calculated from the dimensions as the standard gives them, with no allowance for tolerance.

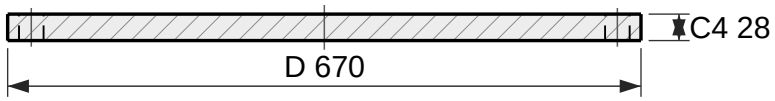


Section

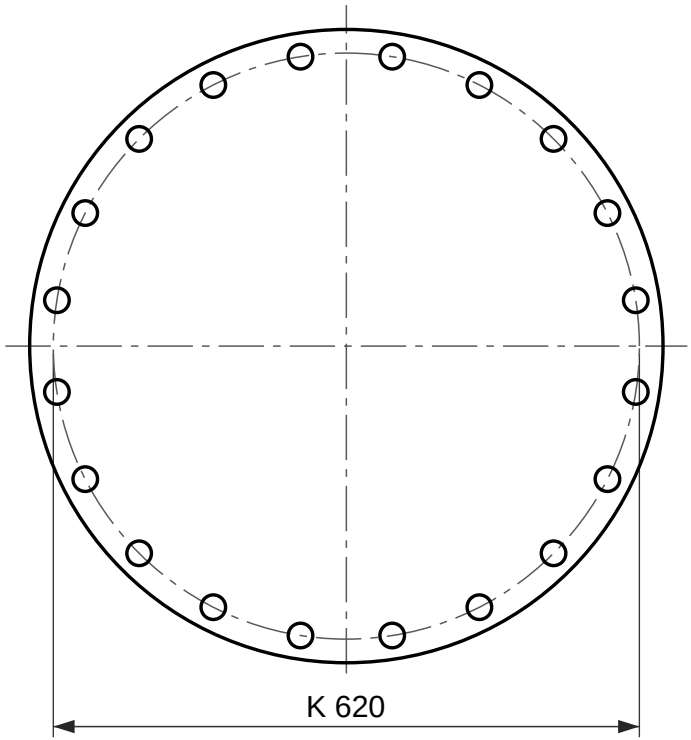


20 holes Ø26

Face view

# Blind flange, EN 1092-1 type 05, PN 10

DN 500, facing type A (flat face)

Designation: Flange EN 1092-1/05/A/DN 500/PN 10
Dimensions per EN 1092-1:2018, Table 12 (PN 10) and Table 8 (facing); tolerances per EN 1092-1.
Facing type A (flat face), as 5.7.2.3 gives this type unless the order says otherwise.
Reference drawing. The purchase order and EN 1092-1 govern.
Generated at rajendradatacenter.com/flanges/en-1092-1/

| Dimension | mm | in |
|---|---|---|
| D Outside diameter | 670 | 26.38 |
| C4 Flange thickness | 28 | 1.10 |
| K Bolt circle diameter | 620 | 24.41 |
| L Bolt holes, 20 off | 26 | 1.02 |

20 bolts M24; holes 26 mm (1.02 in)

RAJENDRA INDUSTRIAL CORPORATION
rajendradatacenter.com
Drawing RIC-EN1092-05-PN10-DN500-A
Scale 1:8 on A4
Units: mm (inches)
Date 2026-11-22
Quote: rajendradatacenter.com/rfq/
sales@rajendradatacenter.com
+91 74338 71355