**Approx. weight**

| Material | kg | lb |
|---|---|---|
| Carbon steel | 1.1 | 2.5 |
| Stainless steel 304 and 304L | 1.1 | 2.5 |
| Stainless steel 316 and 316L | 1.2 | 2.6 |

Densities 7.85, 7.9 and 8.0 g/cm3.
Calculated from the dimensions as the standard gives them, with no allowance for tolerance.

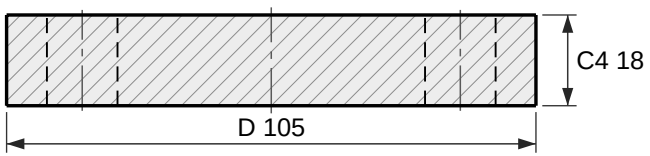


Section

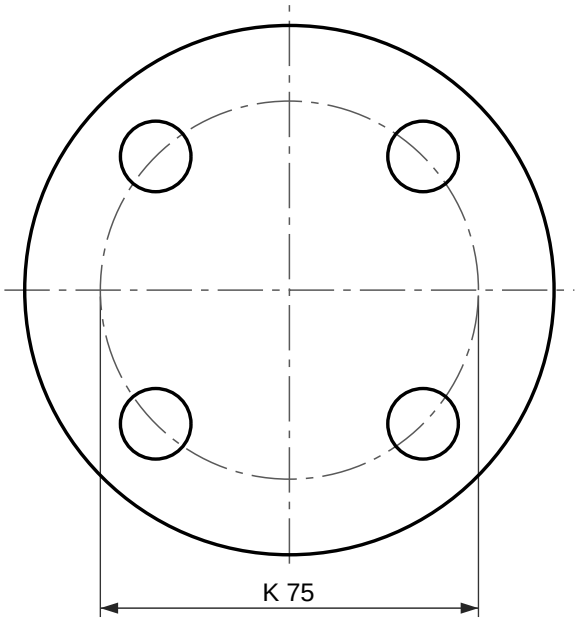


4 holes Ø14

Face view

# Blind flange, EN 1092-1 type 05, PN 10

DN 20, facing type A (flat face)

Designation: Flange EN 1092-1/05/A/DN 20/PN 10
Dimensions per EN 1092-1:2018, Table 12 (PN 10) and Table 8 (facing); tolerances per EN 1092-1.
Facing type A (flat face), as 5.7.2.3 gives this type unless the order says otherwise.
EN 1092-1 gives PN 10 the same dimensions as PN 16, PN 25, PN 40 in DN 20; only the marking differs.
Reference drawing. The purchase order and EN 1092-1 govern.
Generated at rajendradatacenter.com/flanges/en-1092-1/

| Dimension | mm | in |
|---|---|---|
| D Outside diameter | 105 | 4.13 |
| C4 Flange thickness | 18 | 0.71 |
| K Bolt circle diameter | 75 | 2.95 |
| L Bolt holes, 4 off | 14 | 0.55 |

4 bolts M12; holes 14 mm (0.55 in)

RAJENDRA INDUSTRIAL CORPORATION
rajendradatacenter.com
Drawing RIC-EN1092-05-PN10-DN20-A
Scale 1:1.5 on A4
Units: mm (inches)
Date 2026-11-22
Quote: rajendradatacenter.com/rfq/
sales@rajendradatacenter.com
+91 74338 71355