Approx. weight

Material	kg	lb
Carbon steel	1.8	4.0
Stainless steel 304 and 304L	1.8	4.1
Stainless steel 316 and 316L	1.9	4.1

Densities 7.85, 7.9 and 8.0 g/cm3.
Calculated from the dimensions as the standard gives them, with no allowance for tolerance.

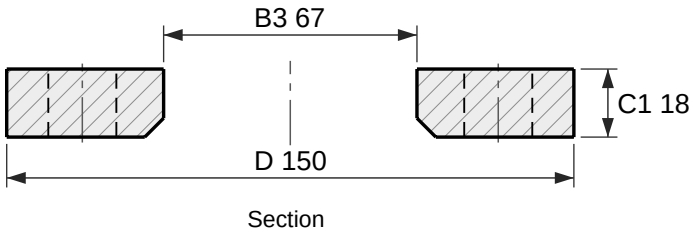

Section

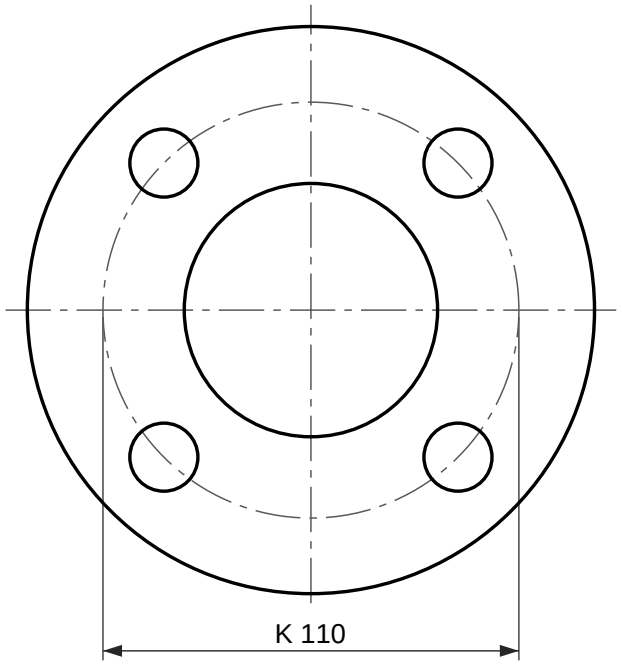

4 holes Ø18
Face view

Loose plate flange for a weld-neck collar, EN 1092-1 type 04, PN 40

DN 40, for a collar type 34

Designation: Flange EN 1092-1/04/DN 40/PN 40
Dimensions per EN 1092-1:2018, Table 15 (PN 40) and Table 8 (facing); tolerances per EN 1092-1.
A loose plate flange turns on a collar, EN 1092-1 type 34, which is welded to the pipe and is not drawn here. The collar carries the joint face.
EN 1092-1 gives PN 40 the same dimensions as PN 10, PN 16, PN 25 in DN 40; only the marking differs.
Reference drawing. The purchase order and EN 1092-1 govern.
Generated at rajendradatacenter.com/flanges/en-1092-1/

Dimension	mm	in
D Outside diameter	150	5.91
C1 Flange thickness	18	0.71
B3 Bore	67	2.64
E Chamfer at the bore	5	0.20
K Bolt circle diameter	110	4.33
L Bolt holes, 4 off	18	0.71

4 bolts M16; holes 18 mm (0.71 in)

RAJENDRA INDUSTRIAL CORPORATION
rajendradatacenter.com
Drawing RIC-EN1092-04-PN40-DN40
Scale 1:2 on A4
Units: mm (inches)
Date 2026-11-22
Quote: rajendradatacenter.com/rfq/
sales@rajendradatacenter.com
+91 74338 71355