Approx. weight

Material	kg	lb
Carbon steel	35.7	78.8
Stainless steel 304 and 304L	36.0	79.3
Stainless steel 316 and 316L	36.4	80.3

Densities 7.85, 7.9 and 8.0 g/cm3.
Calculated from the dimensions as the standard gives them, with no allowance for tolerance.

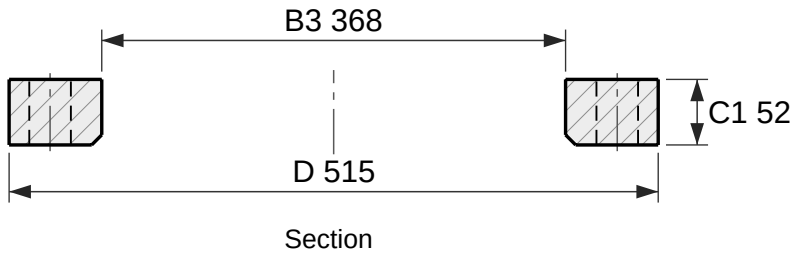

Section

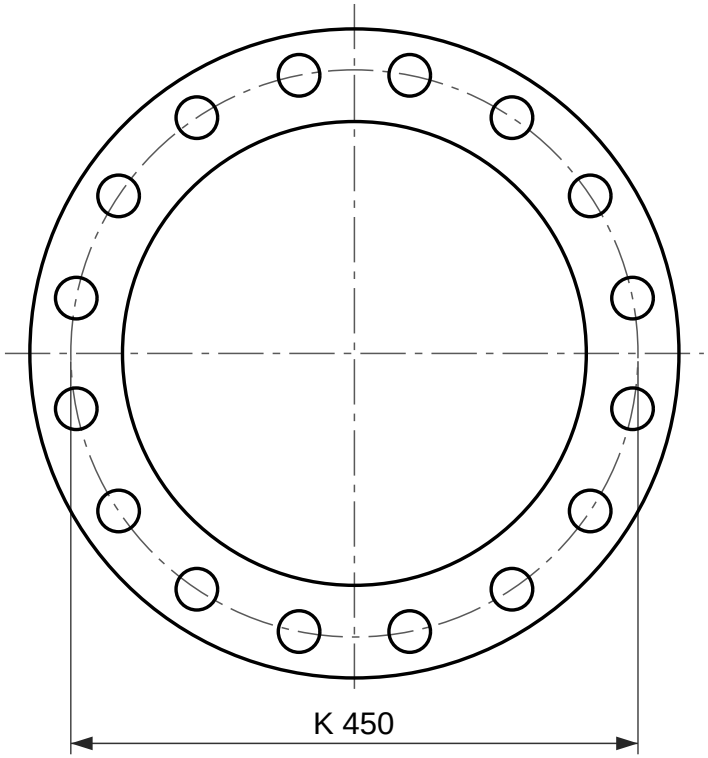

16 holes Ø33

Face view

Loose plate flange for a weld-neck collar, EN 1092-1 type 04, PN 40

DN 300, for a collar type 34

Designation: Flange EN 1092-1/04/DN 300/PN 40
Dimensions per EN 1092-1:2018, Table 15 (PN 40) and Table 8 (facing); tolerances per EN 1092-1.
A loose plate flange turns on a collar, EN 1092-1 type 34, which is welded to the pipe and is not drawn here. The collar carries the joint face.
Reference drawing. The purchase order and EN 1092-1 govern.
Generated at rajendradatacenter.com/flanges/en-1092-1/

Dimension	mm	in
D Outside diameter	515	20.28
C1 Flange thickness	52	2.05
B3 Bore	368	14.49
E Chamfer at the bore	8	0.31
K Bolt circle diameter	450	17.72
L Bolt holes, 16 off	33	1.30

16 bolts M30; holes 33 mm (1.30 in)

RAJENDRA INDUSTRIAL CORPORATION
rajendradatacenter.com
Drawing RIC-EN1092-04-PN40-DN300
Scale 1:6 on A4
Units: mm (inches)
Date 2026-11-22
Quote: rajendradatacenter.com/rfq/
sales@rajendradatacenter.com
+91 74338 71355