**Approx. weight**

| Material | kg | lb |
|---|---|---|
| Carbon steel | 1.0 | 2.2 |
| Stainless steel 304 and 304L | 1.0 | 2.2 |
| Stainless steel 316 and 316L | 1.0 | 2.2 |

Densities 7.85, 7.9 and 8.0 g/cm3.
Calculated from the dimensions as the standard gives them, with no allowance for tolerance.

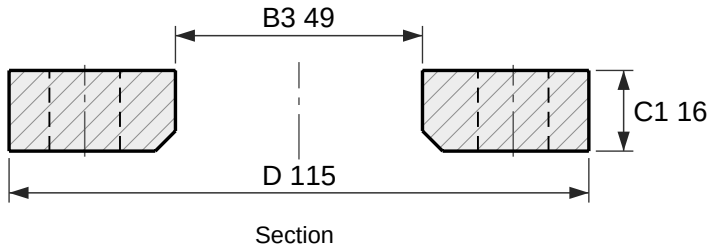

Section

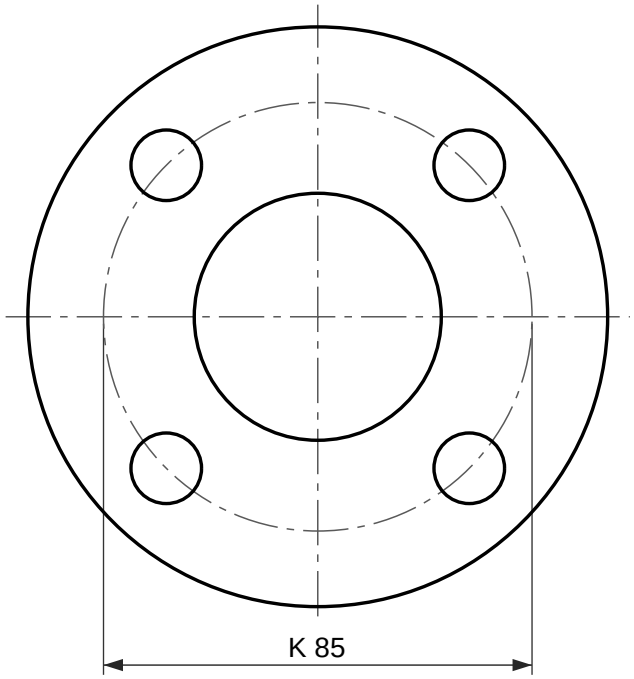

4 holes Ø14
Face view

# Loose plate flange for a weld-neck collar, EN 1092-1 type 04, PN 40

DN 25, for a collar type 34

Designation: Flange EN 1092-1/04/DN 25/PN 40
Dimensions per EN 1092-1:2018, Table 15 (PN 40) and Table 8 (facing); tolerances per EN 1092-1.
A loose plate flange turns on a collar, EN 1092-1 type 34, which is welded to the pipe and is not drawn here. The collar carries the joint face.
EN 1092-1 gives PN 40 the same dimensions as PN 10, PN 16, PN 25 in DN 25; only the marking differs.
Reference drawing. The purchase order and EN 1092-1 govern.
Generated at rajendradatacenter.com/flanges/en-1092-1/

| Dimension | mm | in |
|---|---|---|
| D Outside diameter | 115 | 4.53 |
| C1 Flange thickness | 16 | 0.63 |
| B3 Bore | 49 | 1.93 |
| E Chamfer at the bore | 4 | 0.16 |
| K Bolt circle diameter | 85 | 3.35 |
| L Bolt holes, 4 off | 14 | 0.55 |

4 bolts M12; holes 14 mm (0.55 in)

RAJENDRA INDUSTRIAL CORPORATION
rajendradatacenter.com
Drawing RIC-EN1092-04-PN40-DN25
Scale 1:1.5 on A4
Units: mm (inches)
Date 2026-11-22
Quote: rajendradatacenter.com/rfq/
sales@rajendradatacenter.com
+91 74338 71355