Approx. weight

Material	kg	lb
Carbon steel	6.8	15.0
Stainless steel 304 and 304L	6.9	15.1
Stainless steel 316 and 316L	6.9	15.3

Densities 7.85, 7.9 and 8.0 g/cm3.
Calculated from the dimensions as the standard gives them, with no allowance for tolerance.

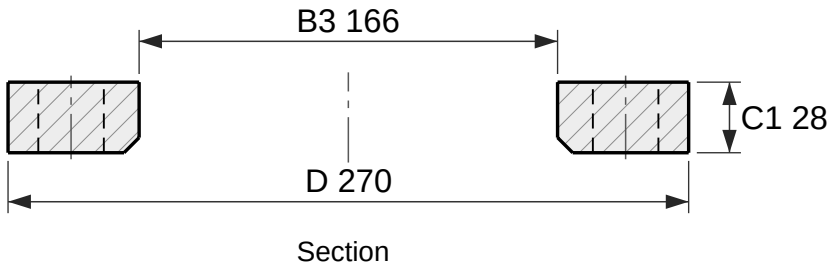

Section

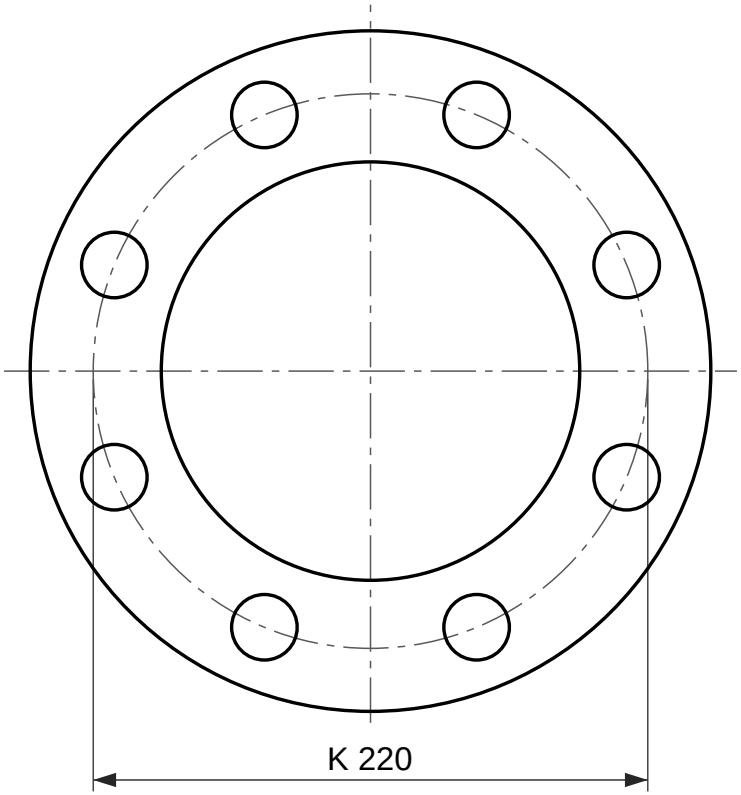

8 holes Ø26

Face view

Loose plate flange for a weld-neck collar, EN 1092-1 type 04, PN 40

DN 125, for a collar type 34

Designation: Flange EN 1092-1/04/DN 125/PN 40
Dimensions per EN 1092-1:2018, Table 15 (PN 40) and Table 8 (facing); tolerances per EN 1092-1.
A loose plate flange turns on a collar, EN 1092-1 type 34, which is welded to the pipe and is not drawn here. The collar carries the joint face.
EN 1092-1 gives PN 40 the same dimensions as PN 25 in DN 125; only the marking differs.
Reference drawing. The purchase order and EN 1092-1 govern.
Generated at rajendradatacenter.com/flanges/en-1092-1/

Dimension	mm	in
D Outside diameter	270	10.63
C1 Flange thickness	28	1.10
B3 Bore	166	6.54
E Chamfer at the bore	6	0.24
K Bolt circle diameter	220	8.66
L Bolt holes, 8 off	26	1.02

8 bolts M24; holes 26 mm (1.02 in)

RAJENDRA INDUSTRIAL CORPORATION
rajendradatacenter.com
Drawing RIC-EN1092-04-PN40-DN125
Scale 1:3 on A4
Units: mm (inches)
Date 2026-11-22
Quote: rajendradatacenter.com/rfq/
sales@rajendradatacenter.com
+91 74338 71355