Approx. weight

Material	kg	lb
Carbon steel	31.8	70.1
Stainless steel 304 and 304L	32.0	70.6
Stainless steel 316 and 316L	32.4	71.5

Densities 7.85, 7.9 and 8.0 g/cm3.
Calculated from the dimensions as the standard gives them, with no allowance for tolerance.

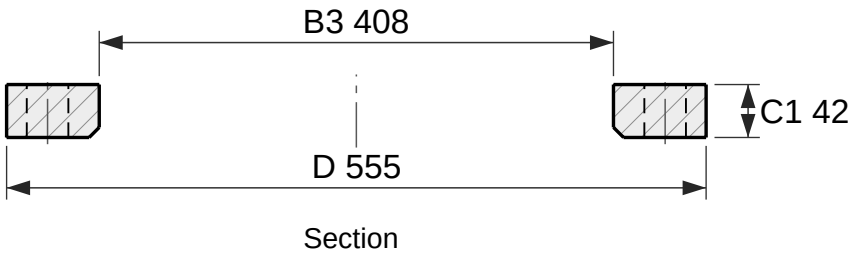

Section

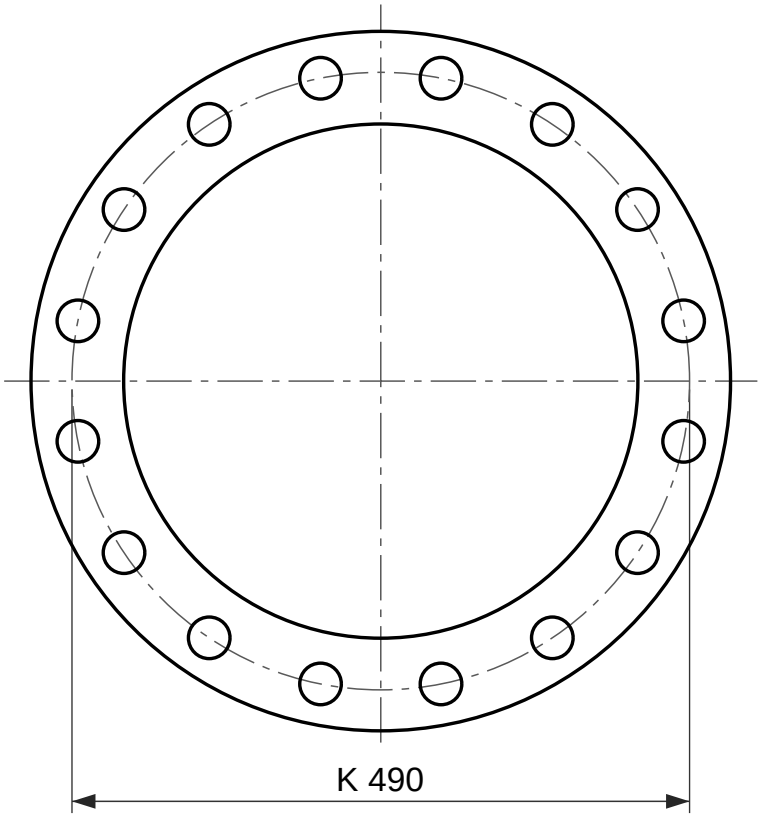

16 holes Ø33

Face view

Loose plate flange for a weld-neck collar, EN 1092-1 type 04, PN 25

DN 350, for a collar type 34

Designation: Flange EN 1092-1/04/DN 350/PN 25
Dimensions per EN 1092-1:2018, Table 14 (PN 25) and Table 8 (facing); tolerances per EN 1092-1.
A loose plate flange turns on a collar, EN 1092-1 type 34, which is welded to the pipe and is not drawn here. The collar carries the joint face.
Reference drawing. The purchase order and EN 1092-1 govern.
Generated at rajendradatacenter.com/flanges/en-1092-1/

Dimension	mm	in
D Outside diameter	555	21.85
C1 Flange thickness	42	1.65
B3 Bore	408	16.06
E Chamfer at the bore	8	0.31
K Bolt circle diameter	490	19.29
L Bolt holes, 16 off	33	1.30

16 bolts M30; holes 33 mm (1.30 in)

RAJENDRA INDUSTRIAL CORPORATION
rajendradatacenter.com
Drawing RIC-EN1092-04-PN25-DN350
Scale 1:6 on A4
Units: mm (inches)
Date 2026-11-22
Quote: rajendradatacenter.com/rfq/
sales@rajendradatacenter.com
+91 74338 71355