Approx. weight

Material	kg	lb
Carbon steel	26.8	59.1
Stainless steel 304 and 304L	27.0	59.4
Stainless steel 316 and 316L	27.3	60.2

Densities 7.85, 7.9 and 8.0 g/cm3.
Calculated from the dimensions as the standard gives them, with no allowance for tolerance.

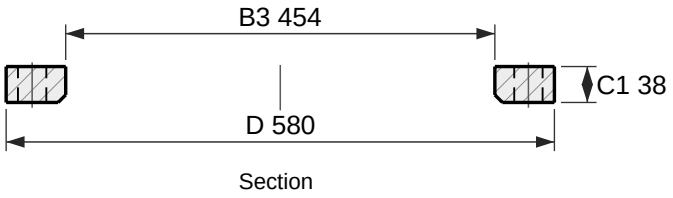

Section

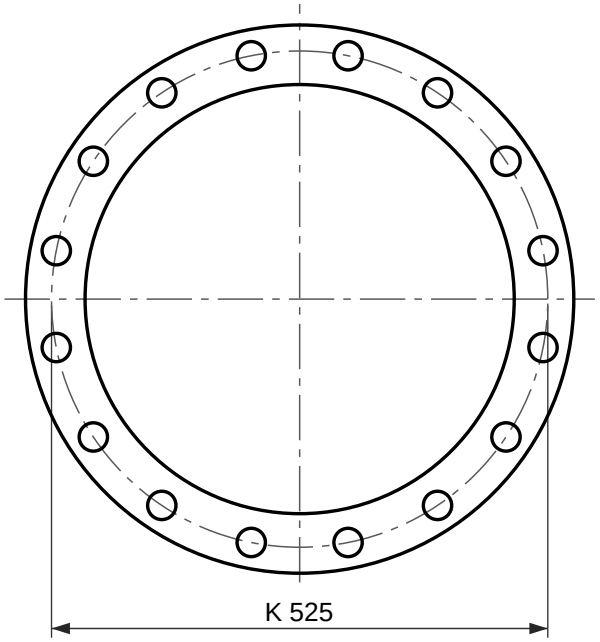

16 holes Ø30
Face view

Loose plate flange for a weld-neck collar, EN 1092-1 type 04, PN 16

DN 400, for a collar type 34

Designation: Flange EN 1092-1/04/DN 400/PN 16
Dimensions per EN 1092-1:2018, Table 13 (PN 16) and Table 8 (facing); tolerances per EN 1092-1.
A loose plate flange turns on a collar, EN 1092-1 type 34, which is welded to the pipe and is not drawn here. The collar carries the joint face.
Reference drawing. The purchase order and EN 1092-1 govern.
Generated at rajendradatacenter.com/flanges/en-1092-1/

Dimension	mm	in
D Outside diameter	580	22.83
C1 Flange thickness	38	1.50
B3 Bore	454	17.87
E Chamfer at the bore	8	0.31
K Bolt circle diameter	525	20.67
L Bolt holes, 16 off	30	1.18

16 bolts M27; holes 30 mm (1.18 in)

RAJENDRA INDUSTRIAL CORPORATION
rajendradatacenter.com
Drawing RIC-EN1092-04-PN16-DN400
Scale 1:8 on A4
Units: mm (inches)
Date 2026-11-22
Quote: rajendradatacenter.com/rfq/
sales@rajendradatacenter.com
+91 74338 71355