Approx. weight

Material	kg	lb
Carbon steel	16.0	35.2
Stainless steel 304 and 304L	16.1	35.4
Stainless steel 316 and 316L	16.3	35.9

Densities 7.85, 7.9 and 8.0 g/cm3.
Calculated from the dimensions as the standard gives them, with no allowance for tolerance.

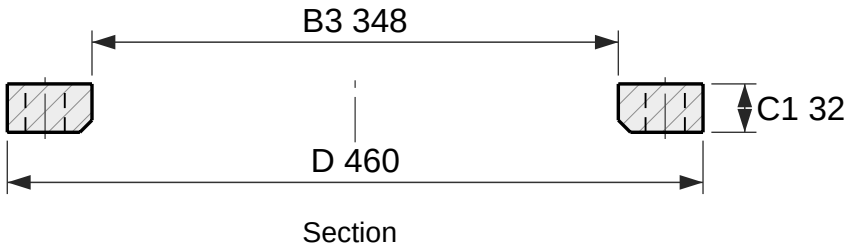

Section

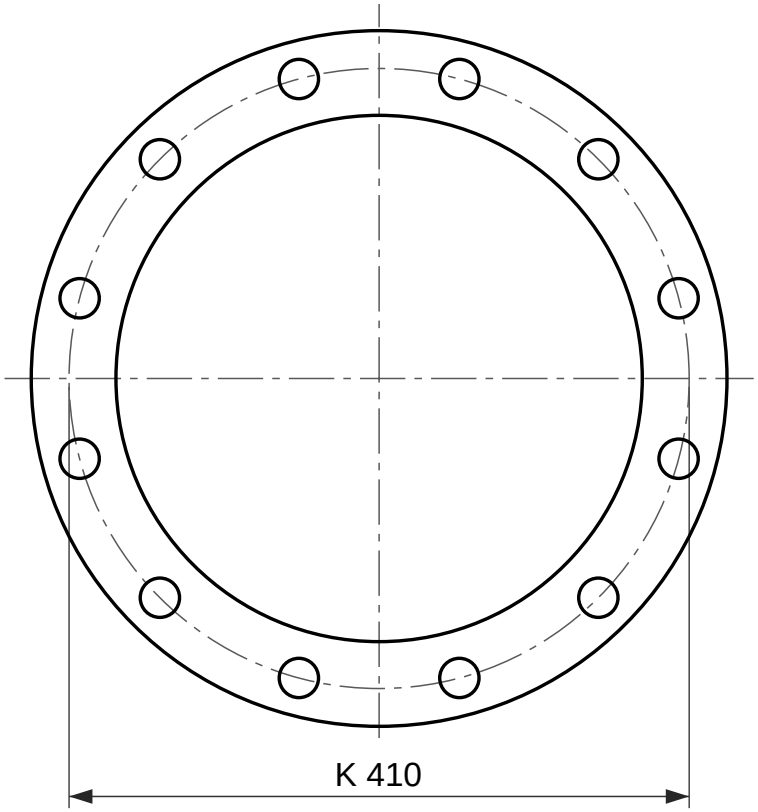

12 holes Ø26

Face view

Loose plate flange for a weld-neck collar, EN 1092-1 type 04, PN 16

DN 300, for a collar type 34

Designation: Flange EN 1092-1/04/DN 300/PN 16
Dimensions per EN 1092-1:2018, Table 13 (PN 16) and Table 8 (facing); tolerances per EN 1092-1.
A loose plate flange turns on a collar, EN 1092-1 type 34, which is welded to the pipe and is not drawn here. The collar carries the joint face.
Reference drawing. The purchase order and EN 1092-1 govern.
Generated at rajendradatacenter.com/flanges/en-1092-1/

Dimension	mm	in
D Outside diameter	460	18.11
C1 Flange thickness	32	1.26
B3 Bore	348	13.70
E Chamfer at the bore	8	0.31
K Bolt circle diameter	410	16.14
L Bolt holes, 12 off	26	1.02

12 bolts M24; holes 26 mm (1.02 in)

RAJENDRA INDUSTRIAL CORPORATION
rajendradatacenter.com
Drawing RIC-EN1092-04-PN16-DN300
Scale 1:5 on A4
Units: mm (inches)
Date 2026-11-22
Quote: rajendradatacenter.com/rfq/
sales@rajendradatacenter.com
+91 74338 71355