Approx. weight

Material	kg	lb
Carbon steel	10.0	22.0
Stainless steel 304 and 304L	10.1	22.2
Stainless steel 316 and 316L	10.2	22.4

Densities 7.85, 7.9 and 8.0 g/cm3.
Calculated from the dimensions as the standard gives them, with no allowance for tolerance.

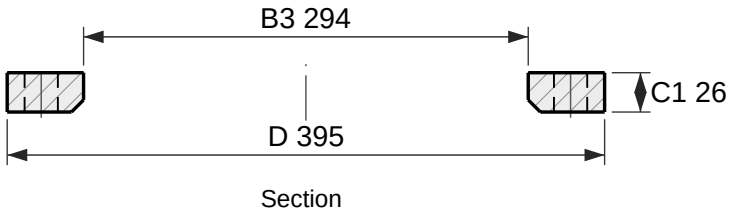

Section

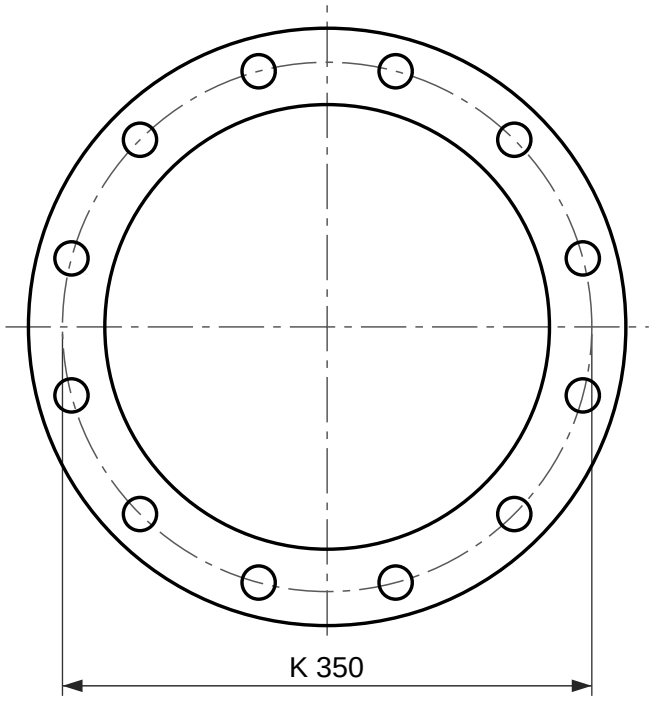

12 holes Ø22
Face view

Loose plate flange for a weld-neck collar, EN 1092-1 type 04, PN 10

DN 250, for a collar type 34

Designation: Flange EN 1092-1/04/DN 250/PN 10
Dimensions per EN 1092-1:2018, Table 12 (PN 10) and Table 8 (facing); tolerances per EN 1092-1.
A loose plate flange turns on a collar, EN 1092-1 type 34, which is welded to the pipe and is not drawn here. The collar carries the joint face.
Reference drawing. The purchase order and EN 1092-1 govern.
Generated at rajendradatacenter.com/flanges/en-1092-1/

Dimension	mm	in
D Outside diameter	395	15.55
C1 Flange thickness	26	1.02
B3 Bore	294	11.57
E Chamfer at the bore	8	0.31
K Bolt circle diameter	350	13.78
L Bolt holes, 12 off	22	0.87

12 bolts M20; holes 22 mm (0.87 in)

RAJENDRA INDUSTRIAL CORPORATION
rajendradatacenter.com
Drawing RIC-EN1092-04-PN10-DN250
Scale 1:5 on A4
Units: mm (inches)
Date 2026-11-22
Quote: rajendradatacenter.com/rfq/
sales@rajendradatacenter.com
+91 74338 71355