Approx. weight

Material	kg	lb
Carbon steel	0.6	1.3
Stainless steel 304 and 304L	0.6	1.3
Stainless steel 316 and 316L	0.6	1.4

Densities 7.85, 7.9 and 8.0 g/cm3.
Calculated from the dimensions as the standard gives them, with no allowance for tolerance.

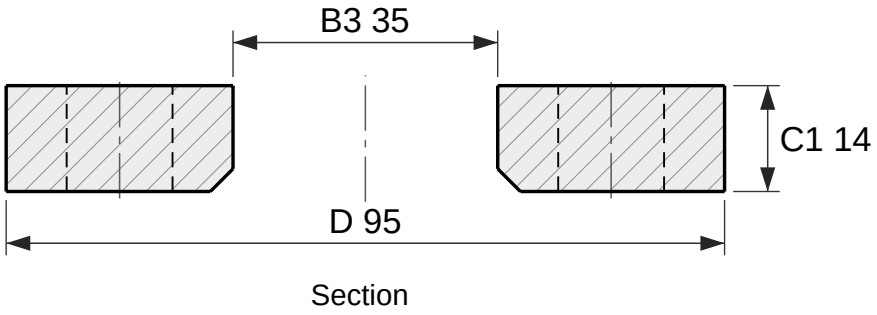

Section

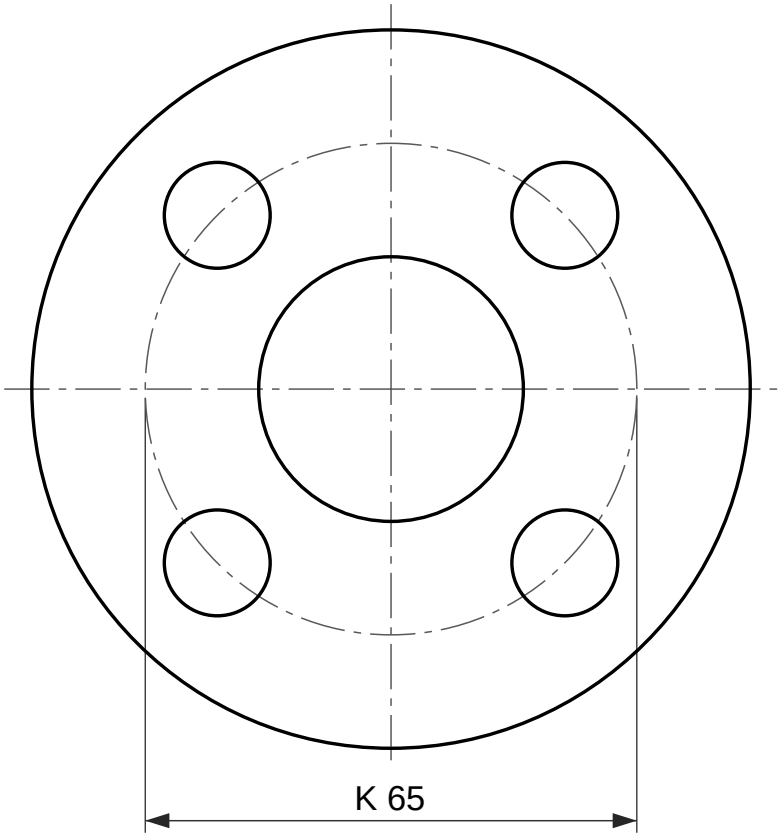

4 holes Ø14

Face view

Loose plate flange for a weld-neck collar, EN 1092-1 type 04, PN 10

DN 15, for a collar type 34

Designation: Flange EN 1092-1/04/DN 15/PN 10
Dimensions per EN 1092-1:2018, Table 12 (PN 10) and Table 8 (facing); tolerances per EN 1092-1.
A loose plate flange turns on a collar, EN 1092-1 type 34, which is welded to the pipe and is not drawn here. The collar carries the joint face.
EN 1092-1 gives PN 10 the same dimensions as PN 16, PN 25, PN 40 in DN 15; only the marking differs.
Reference drawing. The purchase order and EN 1092-1 govern.
Generated at rajendradatacenter.com/flanges/en-1092-1/

Dimension	mm	in
D Outside diameter	95	3.74
C1 Flange thickness	14	0.55
B3 Bore	35	1.38
E Chamfer at the bore	3	0.12
K Bolt circle diameter	65	2.56
L Bolt holes, 4 off	14	0.55

4 bolts M12; holes 14 mm (0.55 in)

RAJENDRA INDUSTRIAL CORPORATION
rajendradatacenter.com
Drawing RIC-EN1092-04-PN10-DN15
Scale 1:1 on A4
Units: mm (inches)
Date 2026-11-22
Quote: rajendradatacenter.com/rfq/
sales@rajendradatacenter.com
+91 74338 71355