Approx. weight

Material	kg	lb
Carbon steel	33.0	72.7
Stainless steel 304 and 304L	33.2	73.1
Stainless steel 316 and 316L	33.6	74.1

Densities 7.85, 7.9 and 8.0 g/cm3.
Calculated from the dimensions as the standard gives them, with no allowance for tolerance.

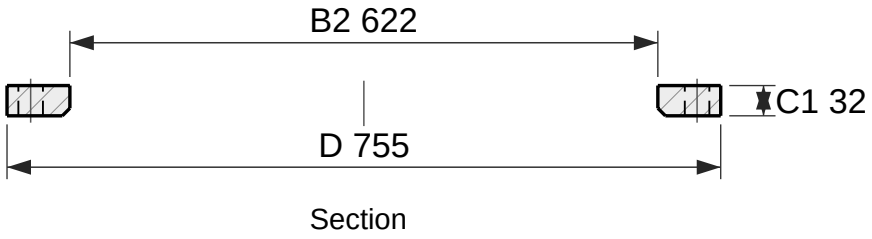

Section

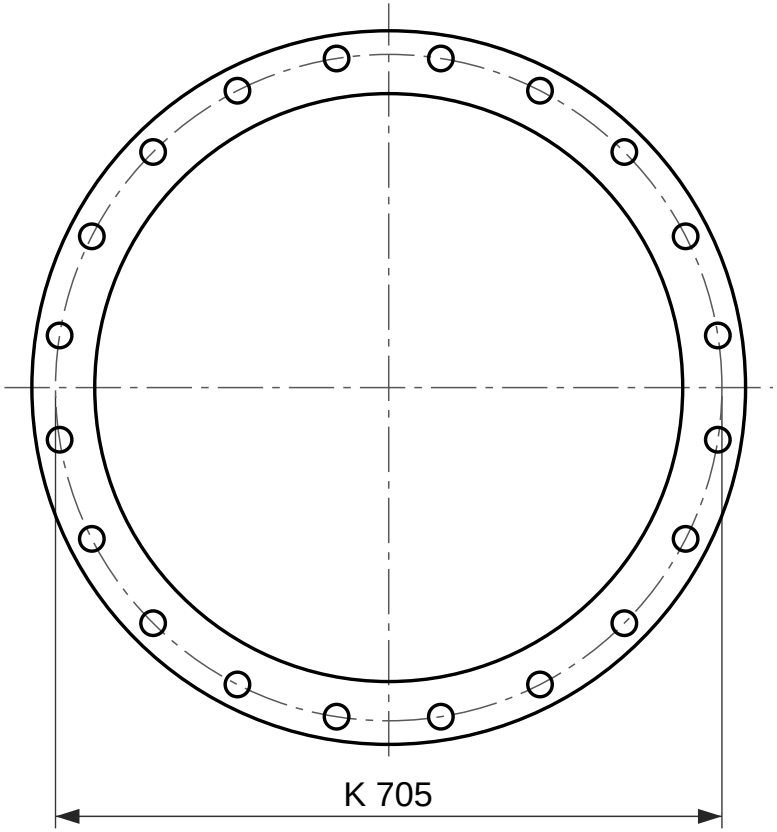

20 holes Ø26

Face view

Loose plate flange, EN 1092-1 type 02, PN 6

DN 600, for a collar type 32, 33, 35, 36 or 37

Designation: Flange EN 1092-1/02/DN 600/PN 6
Dimensions per EN 1092-1:2018, Table 11 (PN 6) and Table 8 (facing); tolerances per EN 1092-1.
A loose plate flange turns on a collar, EN 1092-1 type 32, 33, 35, 36 or 37, which is welded to the pipe and is not drawn here. The collar carries the joint face.
Reference drawing. The purchase order and EN 1092-1 govern.
Generated at rajendradatacenter.com/flanges/en-1092-1/

Dimension	mm	in
D Outside diameter	755	29.72
C1 Flange thickness	32	1.26
B2 Bore	622	24.49
E Chamfer at the bore	8	0.31
K Bolt circle diameter	705	27.76
L Bolt holes, 20 off	26	1.02

20 bolts M24; holes 26 mm (1.02 in)

RAJENDRA INDUSTRIAL CORPORATION
rajendradatacenter.com
Drawing RIC-EN1092-02-PN6-DN600
Scale 1:8 on A4
Units: mm (inches)
Date 2026-11-22
Quote: rajendradatacenter.com/rfq/
sales@rajendradatacenter.com
+91 74338 71355