Approx. weight

Material	kg	lb
Carbon steel	18.8	41.4
Stainless steel 304 and 304L	18.9	41.7
Stainless steel 316 and 316L	19.2	42.2

Densities 7.85, 7.9 and 8.0 g/cm3.
Calculated from the dimensions as the standard gives them, with no allowance for tolerance.

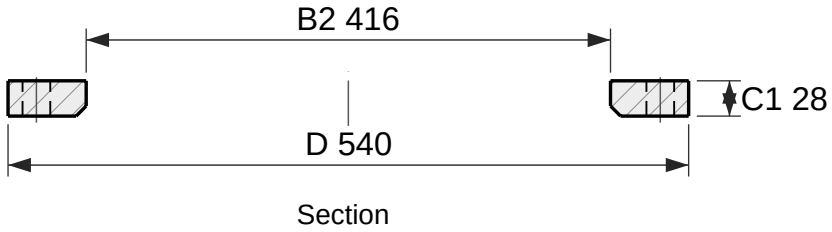

Section

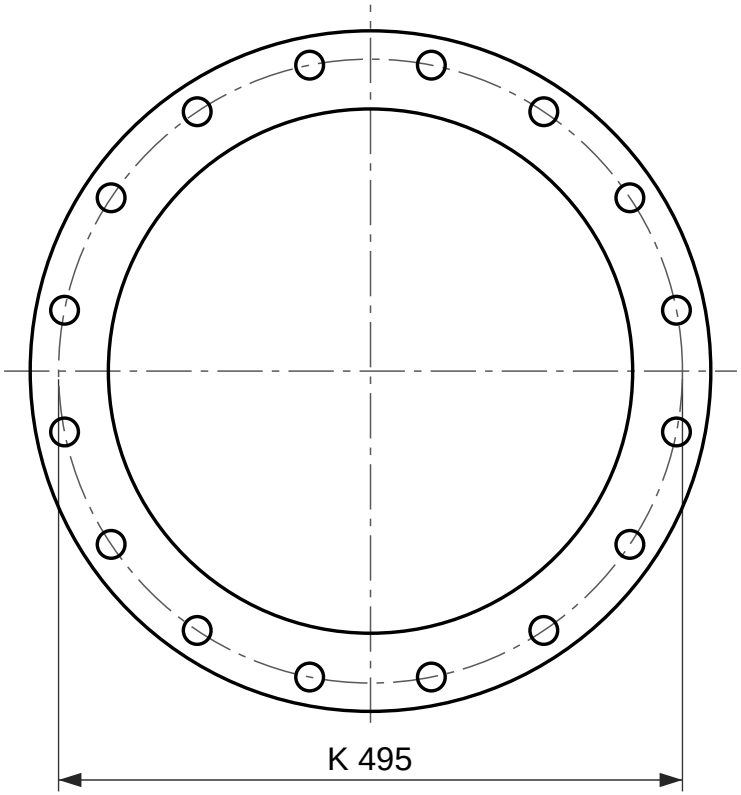

16 holes Ø22

Face view

Loose plate flange, EN 1092-1 type 02, PN 6

DN 400, for a collar type 32, 33, 35, 36 or 37

Designation: Flange EN 1092-1/02/DN 400/PN 6
Dimensions per EN 1092-1:2018, Table 11 (PN 6) and Table 8 (facing); tolerances per EN 1092-1.
A loose plate flange turns on a collar, EN 1092-1 type 32, 33, 35, 36 or 37, which is welded to the pipe and is not drawn here. The collar carries the joint face.
Reference drawing. The purchase order and EN 1092-1 govern.
Generated at rajendradatacenter.com/flanges/en-1092-1/

Dimension	mm	in
D Outside diameter	540	21.26
C1 Flange thickness	28	1.10
B2 Bore	416	16.38
E Chamfer at the bore	8	0.31
K Bolt circle diameter	495	19.49
L Bolt holes, 16 off	22	0.87

16 bolts M20; holes 22 mm (0.87 in)

RAJENDRA INDUSTRIAL CORPORATION
rajendradatacenter.com
Drawing RIC-EN1092-02-PN6-DN400
Scale 1:6 on A4
Units: mm (inches)
Date 2026-11-22
Quote: rajendradatacenter.com/rfq/
sales@rajendradatacenter.com
+91 74338 71355