Approx. weight

Material	kg	lb
Carbon steel	0.6	1.3
Stainless steel 304 and 304L	0.6	1.3
Stainless steel 316 and 316L	0.6	1.3

Densities 7.85, 7.9 and 8.0 g/cm3.
Calculated from the dimensions as the standard gives them, with no allowance for tolerance.

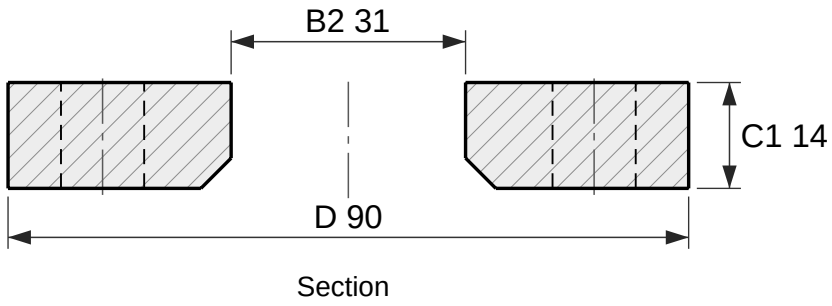

Section

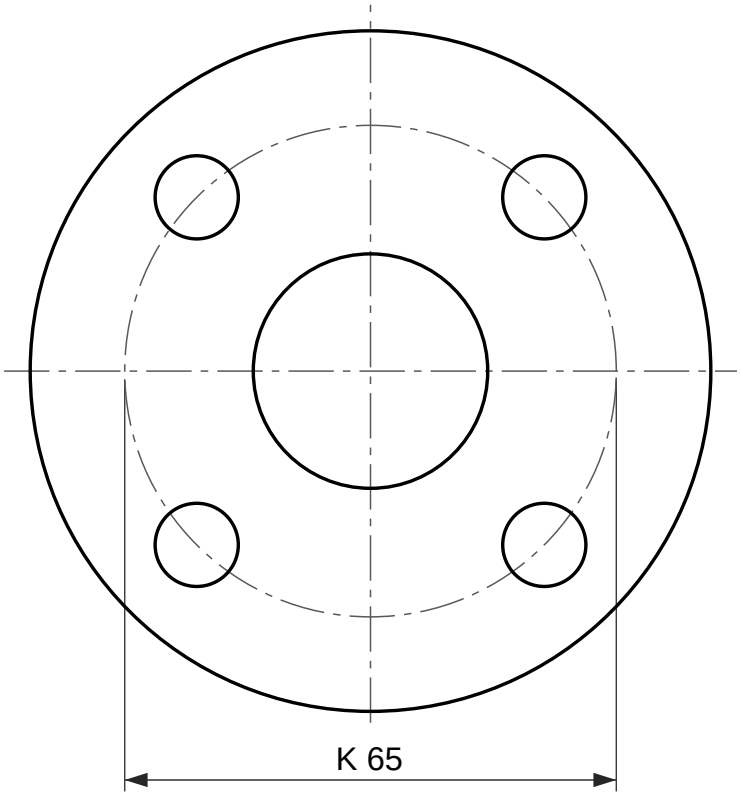

4 holes Ø11

Face view

Loose plate flange, EN 1092-1 type 02, PN 6

DN 20, for a collar type 32, 33, 35, 36 or 37

Designation: Flange EN 1092-1/02/DN 20/PN 6
Dimensions per EN 1092-1:2018, Table 11 (PN 6) and Table 8 (facing); tolerances per EN 1092-1.
A loose plate flange turns on a collar, EN 1092-1 type 32, 33, 35, 36 or 37, which is welded to the pipe and is not drawn here. The collar carries the joint face.
Reference drawing. The purchase order and EN 1092-1 govern.
Generated at rajendradatacenter.com/flanges/en-1092-1/

Dimension	mm	in
D Outside diameter	90	3.54
C1 Flange thickness	14	0.55
B2 Bore	31	1.22
E Chamfer at the bore	4	0.16
K Bolt circle diameter	65	2.56
L Bolt holes, 4 off	11	0.43

4 bolts M10; holes 11 mm (0.43 in)

RAJENDRA INDUSTRIAL CORPORATION
rajendradatacenter.com
Drawing RIC-EN1092-02-PN6-DN20
Scale 1:1 on A4
Units: mm (inches)
Date 2026-11-22
Quote: rajendradatacenter.com/rfq/
sales@rajendradatacenter.com
+91 74338 71355