**Approx. weight**

| Material | kg | lb |
|---|---|---|
| Carbon steel | 3.4 | 7.4 |
| Stainless steel 304 and 304L | 3.4 | 7.5 |
| Stainless steel 316 and 316L | 3.4 | 7.6 |

Densities 7.85, 7.9 and 8.0 g/cm3.
Calculated from the dimensions as the standard gives them, with no allowance for tolerance.

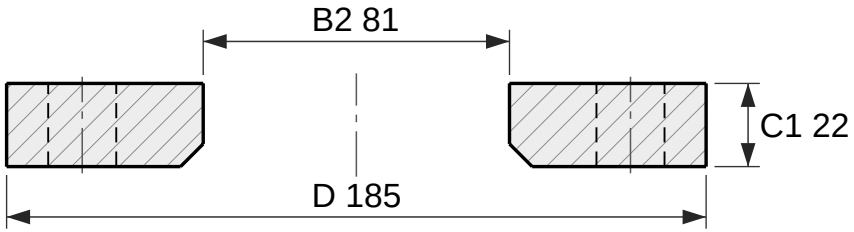


Section

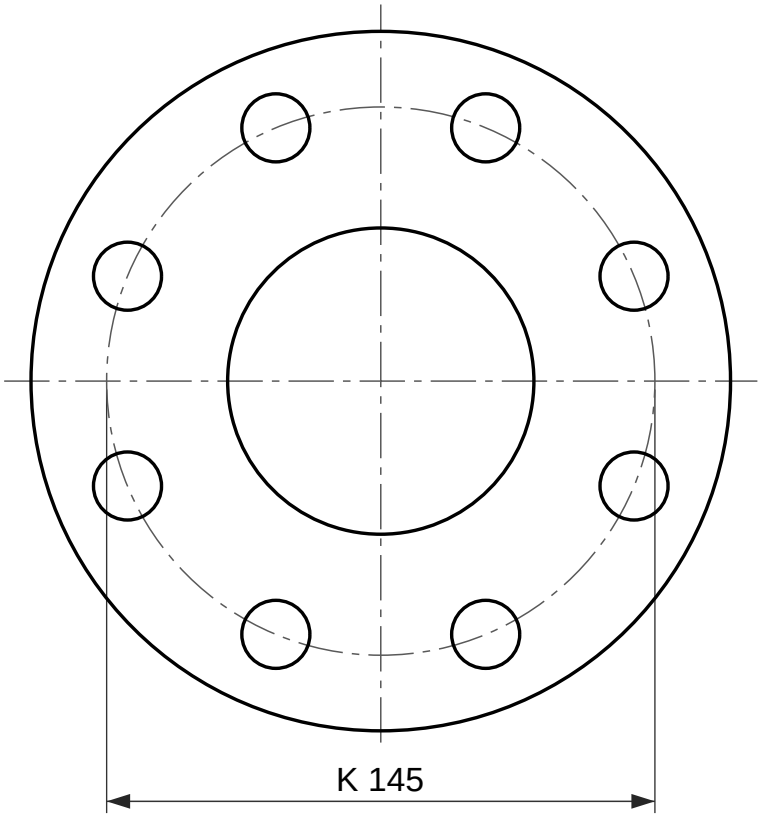


8 holes Ø18

Face view

# Loose plate flange, EN 1092-1 type 02, PN 40

DN 65, for a collar type 32, 33, 35, 36 or 37

Designation: Flange EN 1092-1/02/DN 65/PN 40
Dimensions per EN 1092-1:2018, Table 15 (PN 40) and Table 8 (facing); tolerances per EN 1092-1.
A loose plate flange turns on a collar, EN 1092-1 type 32, 33, 35, 36 or 37, which is welded to the pipe and is not drawn here. The collar carries the joint face.
EN 1092-1 gives PN 40 the same dimensions as PN 25 in DN 65; only the marking differs.
Reference drawing. The purchase order and EN 1092-1 govern.
Generated at rajendradatacenter.com/flanges/en-1092-1/

| Dimension | mm | in |
|---|---|---|
| D Outside diameter | 185 | 7.28 |
| C1 Flange thickness | 22 | 0.87 |
| B2 Bore | 81 | 3.19 |
| E Chamfer at the bore | 6 | 0.24 |
| K Bolt circle diameter | 145 | 5.71 |
| L Bolt holes, 8 off | 18 | 0.71 |

8 bolts M16; holes 18 mm (0.71 in)

RAJENDRA INDUSTRIAL CORPORATION
rajendradatacenter.com
Drawing RIC-EN1092-02-PN40-DN65
Scale 1:2 on A4
Units: mm (inches)
Date 2026-11-22
Quote: rajendradatacenter.com/rfq/
sales@rajendradatacenter.com
+91 74338 71355